Service instructions

ROTIXA 500 RS

Translation of the original service instructions

Read the instructions prior to performing any task!

© Andreas Hettich GmbH & Co. KG 2020

Andreas Hettich GmbH & Co. KG

Föhrenstraße 12

78532 Tuttlingen

GERMANY

Single Registration Number: DE-MF-000010680

Telephone: +49 7461 705-1400

Fax: +49 7461 705-1125

Email: info@hettichlab.com

Email: service@hettichlab.com

Internet: www.hettichlab.com

Table of contents

1 Overview of the device. 7
1.1 Block diagram. 10
1.2 Control panel and display elements. 11
1.3 Jumper assignment. 13
1.4 Temperature sensors. 14
1.5 Fan control. 15
2 Safety. 16
2.1 Symbols in these instructions. 16
2.2 Intended use. 17
2.3 Remaining risks. 18
2.4 Personnel qualifications. 20
3 Error messages and signal outputs. 22
3.1 Calling up error messages. 22
3.2 Error messages, imbalance messages and change logs. . . . 23
3.3 Visual and acoustic error messages. 25
3.4 Regenerating error messages. 26
4 Error detection and remedy. 27
4.1 Error determination procedure. 27
4.2 Error table. 28
4.3 Mains-Reset. 46
5 Maintenance. 48
5.1 Checking for proper operating state. 48
5.2 Maintenance table. 50
5.3 Performing maintenance tasks. 51
5.3.1 Perform electrical safety check.. 52
6 Repair. 53
6.1 Side panels. 53
6.2 Rear wall. 54
6.3 Front panel. 56
6.4 Front panel. 57
6.5 Motor. 61
6.6 Replace the drive pin on the motor shaft. 65
6.7 Speed sensor. 66
6.8 Supply board (A1). 68
6.9 Frequency converter (A2). 69
6.10 Control panel (A5). 70
6.11 EPROM on control panel (A5). 71
6.12 Battery. 73

6.13 Overvoltage protection. 74
6.14 Unbalance switch. 75
6.15 Lid lock. 76
6.16 Temperature sensors. 78
6.17 Fan. 82
6.18 Motor closure unit. 83
6.19 Gas spring. 84
6.20 Lid seal (between the centrifuge chamber and lid). 85
6.21 Mains switch. 85
6.22 Key switch. 86
6.23 LED of the lid button. 87
6.24 Radio interference filter. 87
6.25 Cooling circuit. 88
6.26 Performing function check after repair. 88
7 Settings and queries. 90
7.1 Start-up after repair. 90
7.1.1 Initializing the centrifuge. 90
7.1.2 Performing an OFFSET alignment. 95
7.1.3 Setting imbalance mode. 96
7.2 Adjusting the contrast of the display. 97
7.3 Setting the hours of operation. 98
7.4 Setting the "Temp.Average" time. 99
7.5 Setting the "Leading Time". 100
7.6 Setting the lid lock version. 101
7.7 Querying the motor slip. 101
7.8 Querying temperatures. 101
7.9 Temperature smoothing. 102
7.10 Activating the program link (option). 104
8 Replacement parts. 105
9 Disposal. 106
9.1 General information. 106
9.2 Scrap types. 107
9.3 Battery disposal. 109
9.4 Cooling circuit. 109
10 Appendix. 111
10.1 Technical data. 111
10.2 Connection plan. 114
10.3 Cooling scheme. 122
10.4 Cooling unit version. 123

10.5 Rotor tacho code. 124
10.6 Maintenance log. 125
11 Index. 128

1 Overview of the device

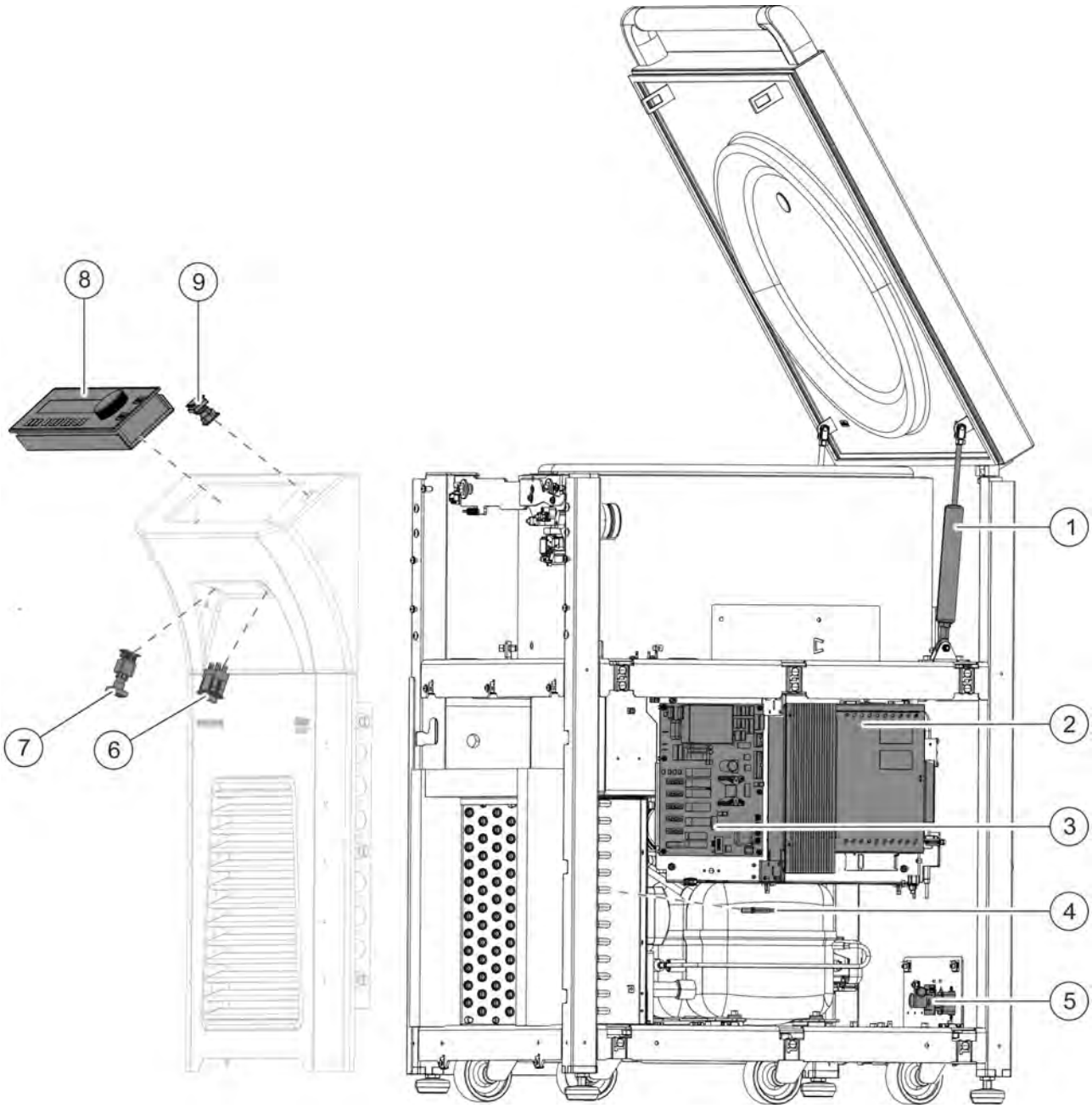

Fig. 1: View of front side and right side of device

Remark: Greyed-out component is a covering part (see ➡ *Chapter 6.4 'Front panel' on page 57*,➡ *Chapter 6.3 'Front panel' on page 56*). Other covering parts are not shown in order to provide a better overview.

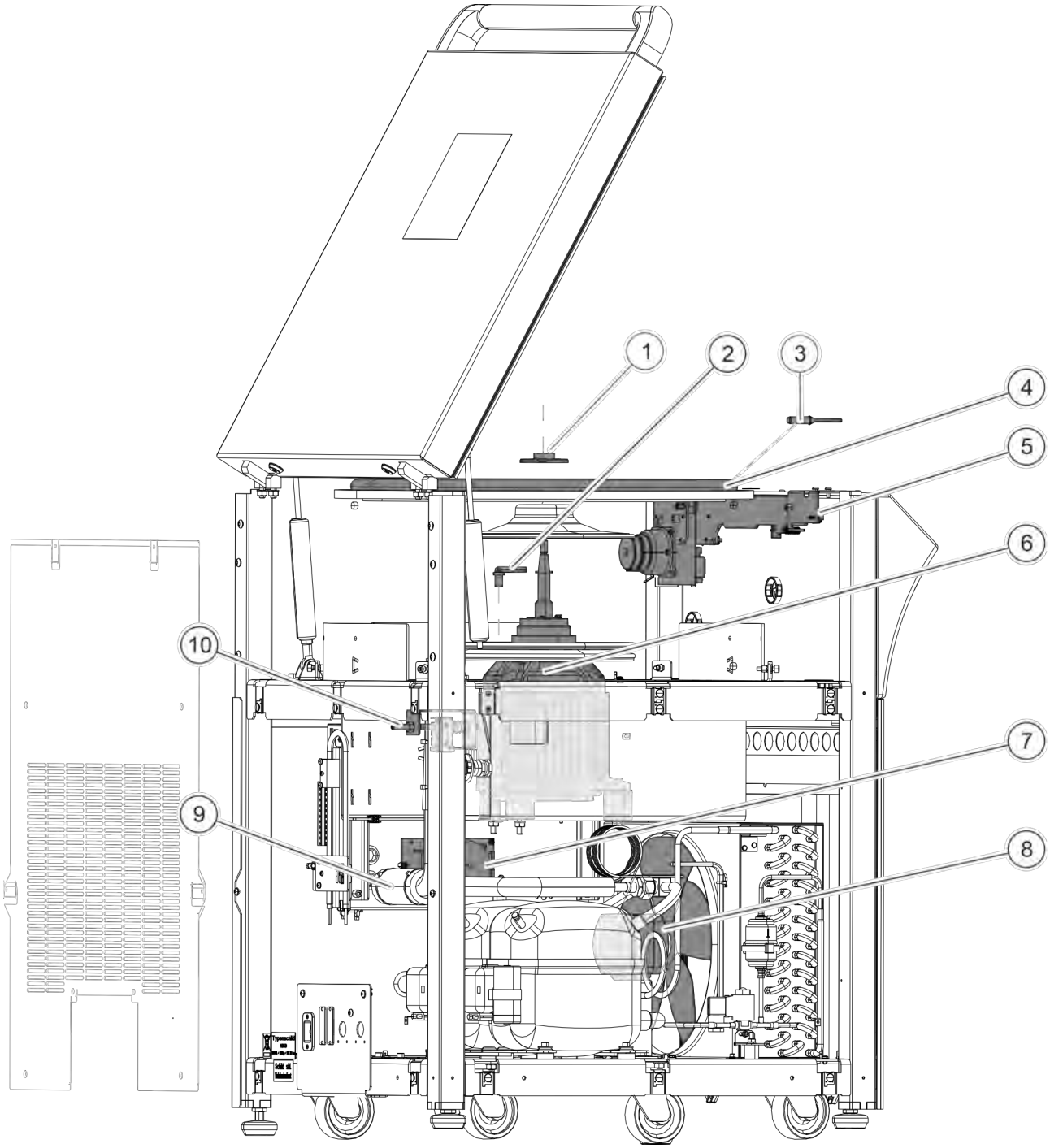

Fig. 2: View of rear side and left side of device

Remark: Greyed-out component is a covering part (see ➡ *Chapter 6.2 'Rear wall' on page 54*). Other covering parts are not shown in order to provide a better overview.

Figure and item no.	Component	Description in these instructions on page
Fig. 1-1	Gas spring	➦ *84*
Fig. 1-2	Frequency converter (A2)	➦ *69*
Fig. 1-3	Supply board (A1)	➦ *68*
Fig. 1-4	Temperature sensor T3 on condenser	➦ *80*
Fig. 1-5	Overvoltage protection	➦ *74*
Fig. 1-6	Mains switch	➦ *85*
Fig. 1-7	Key switch	➦ *86*
Fig. 1-8	Control panel (A5)	➦ *70*
Fig. 1-9	Lid button	➦ *87*
Fig. 2-1	Speed sensor	➦ *66*
Fig. 2-2	Temperature sensor T2 in the centrifuge chamber	➦ *79*
Fig. 2-3	Temperature sensor T1 in the lid seal	➦ *78*
Fig. 2-4	Lid seal	➦ *85*
Fig. 2-5	Lid lock	➦ *76*
Fig. 2-6	Motor	➦ *61*
Fig. 2-7	Radio interference filter	➦ *87*
Fig. 2-8	Fan	➦ *82*
Fig. 2-9	Temperature sensor T4 at suction pipe	➦ *81*
Fig. 2-10	Unbalance switch	➦ *75*

Tab. 1: Overview of components

1.1 Block diagram

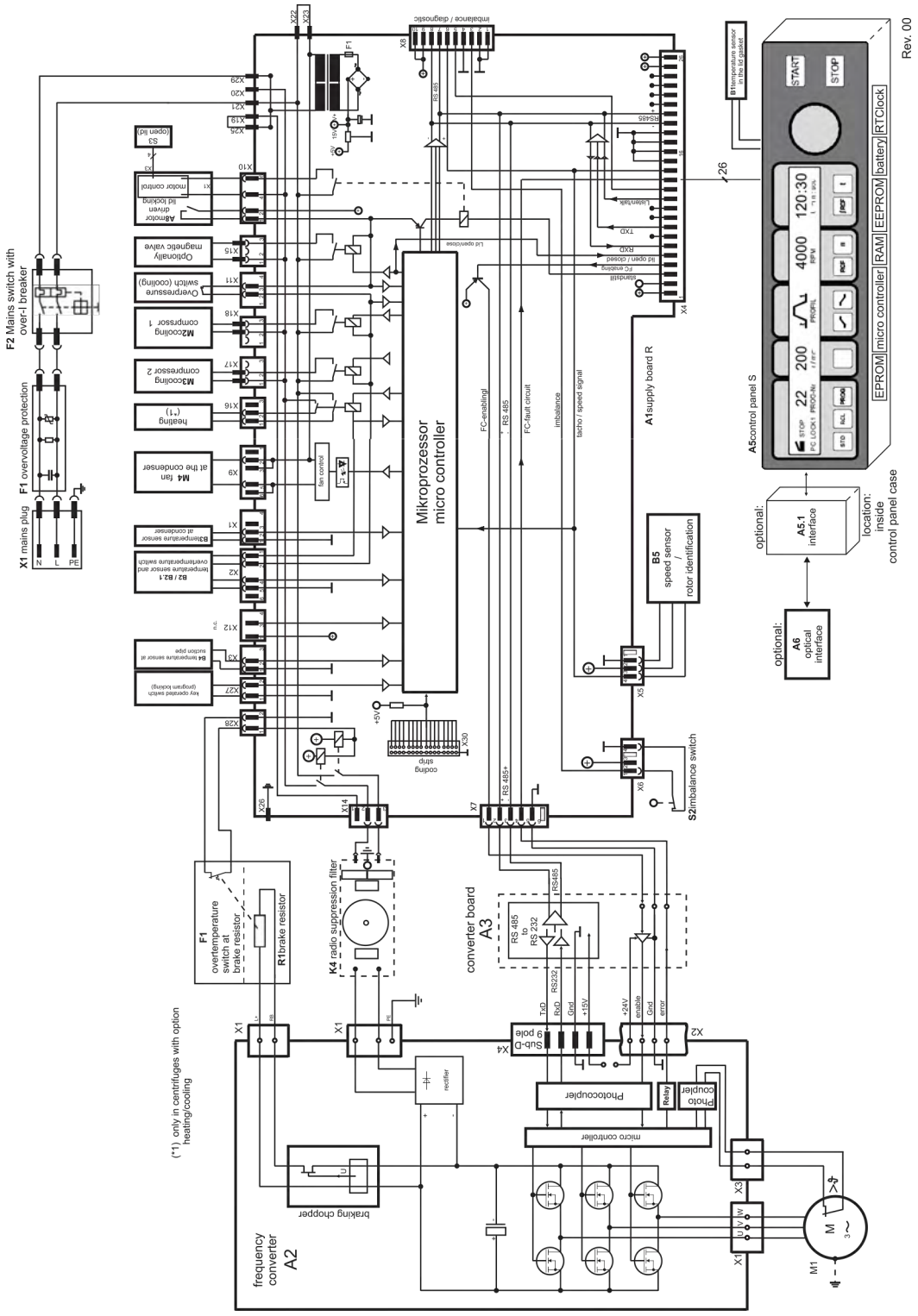

Fig. 3: Block diagram

1.2 Control panel and display elements

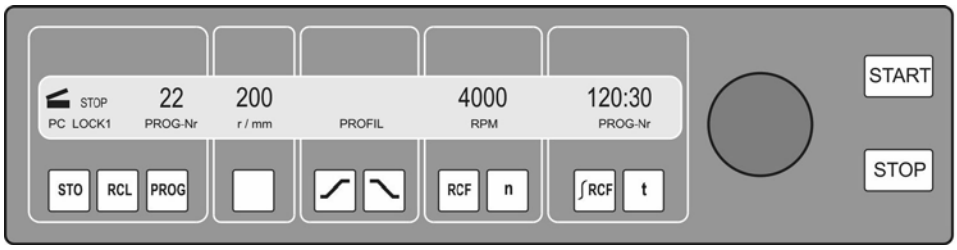

Fig. 4: Control panel

Symbol	Display/status elements	Function
	Lid open/closed symbol	Shows the current status on the display.
	Rotation symbol	This is displayed during the centrifugation run as long as the rotor is turning.
STOP	Centrifugation run stopped or finished.	This is displayed after the centrifugation run has finished, as long as the rotor is turning. The display flashes after an Emergency Stop.
LOCK 1	Switch setting of the key switch	Programs can only be called up but not modified.
LOCK 2		Programs can neither be called up nor changed.
PC	Serial communication symbol	Serial communication is activated.
~~PC~~		Serial communication is deactivated.

Tab. 2: Symbols on the control panel

Symbol	Operating element	Function
	Lid button	Press the lid button on the front faceplate. The lid unlocks motorically; the key lighting goes out.
	Adjusting knob	Turn the rotary knob for setting the individual parameters. Turning counter-clockwise reduces the value; turning clockwise increases the value.
t	Runtime	Set the runtime in minutes (min) and seconds (sec).
∫RCF	Query RCF integral	Querying the integral RCF
n	Speed	Set the speed (RPM).
RCF	Relative centrifugal force	Set the relative centrifugal force.
	Start-up parameters	Set the start-up parameters.
	Run-down parameters	Set the run-down parameters.
	Temperature setpoint	Set the temperature setpoint.
START	Start	Start the centrifugation run.
STOP	Stop	End the centrifugation run.
PROG	Program location	Select a program location.
RCL	Program call	Calling up programs
STO	Program memory	Save program.

Tab. 3: Operating elements on the control panel

1.3 Jumper assignment

Jumper assignment, supply board (A1) (factory setting)

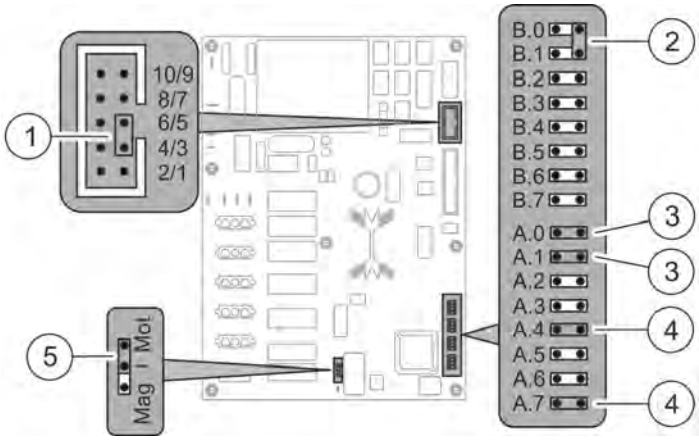

Fig. 5: Jumper assignment for factory setting

On supply board (A1), the device and cooling version as well as the service mode of the centrifuge must be set by plugging in the corresponding jumper (➞ *Chapter 6.8 'Supply board (A1)' on page 68*).

Actively plugging in jumpers is required for the following troubleshooting and basic settings:

Jumper assignment	Function	Comment
A.0 and A.1 (*Fig. 5*/3)	Setting of cooling version 3 (factory setting)	Plug in again after replacing the supply board (➞ *Chapter 6.8 'Supply board (A1)' on page 68*).
A.4 and A.7 (*Fig. 5*/4)	Setting of device version 9 (factory setting)	Plug in again after replacing the supply board (➞ *Chapter 6.8 'Supply board (A1)' on page 68*).
B.0 and B.1 bypass (*Fig. 5*/2)	Resting position of the additional jumper (factory setting)	Is required to activate the initialization (➞ *Chapter 7.1.1 'Initializing the centrifuge' on page 90*) and offset mode (➞ *Chapter 7.1.2 'Performing an OFFSET alignment' on page 95*).
Service jumper at B.0	Performing of the OFFSET alignment (➞ *Chapter 7.1.2 'Performing an OFFSET alignment' on page 95*)	
Service jumper at B.1	Activation of initialization and imbalance mode (➞ *Chapter 7.1.1 'Initializing the centrifuge' on page 90*)	
B.2 and B.3 bypass	Activation of the activated temperature smoothing (option)➞ *Chapter 7.9 'Temperature smoothing' on page 102*	Plug in again after replacing the supply board if necessary.

Jumper assignment	Function	Comment
B.3	Setting of the temperature query and smoothing (option)(➡ *Chapter 7.9 'Temperature smoothing' on page 102*)	Plug in again after replacing the supply board if necessary.
B.6	Activation of the program link (option) (➡ *Chapter 7.10 'Activating the program link (option)' on page 104*)	Plug in again after replacing the supply board if necessary.
At plug X8, jumper at positions pin 3 – 5 (*Fig. 5*/1)	Factory setting (➡ *Chapter 7.1.3 'Setting imbalance mode' on page 96*)	
Position "Mot" (*Fig. 5*/5)	Motor-driven lid lock (➡ *Chapter 7.6 'Setting the lid lock version' on page 101*)	

Tab. 4: Jumper assignment overview

1.4 Temperature sensors

ROTIXA 500 RS includes 4 temperature sensors of variant 4950:

14

Temperature sensor	Comment
(T1) up in the lid seal (➡ *Chapter 6.16 'Temperature sensors' on page 78*)	During centrifugation, the temperature is measured from the ratio of T1 to T2. The temperature measurement depends on the speed range ➡ *Chapter 10.4 'Cooling unit version' on page 123*. The temperature is processed in the control panel (A5).
(T2) down in the centrifuge chamber (➡ *'Dismounting temperature sensor T2 (down in the centrifuge chamber)' on page 79*)	During centrifugation, the temperature is measured from the ratio of T1 to T2. The temperature measurement depends on the speed range ➡ *Chapter 10.4 'Cooling unit version' on page 123*. The temperature is processed on the supply board (A1). An overtemperature switch is additionally installed in the housing of temperature sensor T2. The overtemperature switch switches off the drive at > 60 °C in cooling centrifuges, and at > 80 °C in heating/cooling centrifuges. At a standstill, the temperature is only measured using T2.
(T3) on condenser (➡ *'Dismounting the temperature sensor T3 from the condenser' on page 80*)	The temperature is used for controlling the speed of the fan. If the condenser temperature rises to > 58 °C, the cooling unit switches off.
(T4) at suction pipe (➡ *'Dismounting temperature sensor T4 from the suction pipe' on page 81*)	The temperature is used for controlling the solenoid valve for the injection of the second capillary tube.

Tab. 5: Overview of temperature sensors

1.5 Fan control

- The fan control is a temperature-dependent phase angle control.
- After switching on the cooling unit, the fan runs at a fixed starting speed.
- The running speed of the fan rises with increasing temperature on the condenser.
- At 32 °C, or at latest after 60 seconds, the control uses the fan speed. The fan speed is controlled such that a constant temperature of 34 °C is reached on the condenser.
- After switching off the cooling unit (temperature on the condenser drops), the fan speed is regulated down to the minimum speed.
- Below 28 °C, the phase angle is no longer actuated and the fan switches off.
- The fan runs with temperature control even when the lid is open.
- If there is overtemperature on the condenser (overpressure in the system, i.e. temperature sensor T3 signals a temperature > 58 °C (3.31 V)), the cooling unit and drive switch off, but the fan at the condenser continues to work.

2 Safety

2.1 Symbols in these instructions

Safety information

Safety information in these instructions is marked with symbols. Safety information is introduced with signal words, which indicate the severity of the danger.

DANGER

This combination of symbol and signal word indicates an imminently dangerous situation, which will lead to death or serious injuries if not avoided.

WARNING

This combination of symbol and signal word indicates a potentially imminently dangerous situation, which can lead to death or serious injuries if not avoided.

CAUTION

This combination of symbol and signal word indicates a potentially dangerous situation, which can lead to minor or slight injuries if not avoided.

NOTICE

This combination of symbol and signal word indicates a potentially dangerous situation, which can lead to material damage if not avoided.

ENVIRONMENT

This combination of symbol and signal word indicates an imminently dangerous situation for the environment.

Safety information in handling instructions

Safety information can refer to certain, individual handling instructions. Such safety information is embedded in the handling instruction so that the reading flow is not interrupted while performing the action. The above-described signal words are used.

Example:

1. Loosen screw.
2. CAUTION

   Danger of getting caught on the lid!

   Close the lid carefully.
3. Tighten screw.

Other markings

The following markings are used in these instructions to highlight handling instructions, results, lists, references and other elements:

Marking	Explanation
▶	Step-by-step handing instructions
⇨	Results of handling steps
↳	References to sections of these instructions and other applicable documents
■	Lists without defined order
[Button]	Operating elements (e.g. button, switch), display elements (e. g. signal lamps)
'Display'	Screen elements (e.g. buttons, assignment of function keys)

Tips and recommendations

This symbol highlights useful tips and recommendations, as well as information for efficient, smooth operation.

2.2 Intended use

These instructions are meant as a reference for service technicians from the company Andreas Hettich GmbH & Co. KG or service technicians authorized by them. These instructions allow the device to be safely and efficiently maintained and repaired. The service technician must have thoroughly read through and understood these instructions before beginning work. The basic requirement for working safely is complying with all specified safety information and handling instructions in these service instructions.

Using original spare parts

WARNING

Risk of accident due to installation of third-party components!

All installed components must be provided or approved for use by the manufacturer. The installation of third-party components can result in damage, loss of function and serious accidents. If third-party components are installed and used, the warranty will be void, as well as the responsibility of the manufacturer for consequential damage.

– Always use original spare parts.

2.3 Remaining risks

Electrostatic discharge

WARNING

Risk of injury and material damage due to electrostatic discharge!

High potential differences can result in electrical breakdowns and can discharge as short, high electric current. Here, there is a danger of igniting flammable materials, electric shock and damage to electrical components.

- Before touching any electronic components, always discharge any electric charge on your body.

Residual voltage

WARNING

Risk of injury due to residual voltage!

After disconnecting the device from the mains or after switching off the mains switch, the intermediate circuit capacitors of the frequency converter (A2) are still charged. If conductive parts are touched, this can result in dangerous discharges and injuries.

- Wait for at least 180 seconds before touching conductive parts in order to ensure that the intermediate circuit capacitors of the frequency converter (A2) have discharged.

Danger of burning

WARNING

Danger of burns due to hot surfaces!

During centrifugation, the centrifuge chamber is heated to the preselected temperature as needed. The surface temperature of the heating element in the centrifuge chamber of the device can be as hot as 500°C / 932°F. If touched, this can result in severe burns.

- Never touch a heating element directly after a heated centrifugation run.
- Before touching, always make sure that the heating element has already cooled off.

Emergency unlocking

WARNING

Risk of injury due to the emergency release!

During a power failure, the emergency release must be performed manually. This can result in serious injuries due to electrical shock and/or due to the still running-down rotor.

- Before the manual emergency release, disconnect the centrifuge from the mains and ensure this status, e.g. by locking the switch.
- Look through the window in the lid and make sure that the rotor is stopped.
- Only open the lid when the rotor is at a standstill.

Chemical contamination

WARNING

Health risk due to contamination of the centrifuge!

Due to the different places of use, there is a danger of contamination with chemical and/or radioactive samples. These samples can pose a serious health risk in the event of contact.

- Always ask what the intended purpose of the centrifuge is.
- Before maintenance/repair, make sure that the centrifuge has been cleaned of all contamination.
- If sample residues are to be expected when dismounting the centrifuge, clarify in advance what safety measures are to be taken (e.g., protection class of the rubber gloves).

Biological contamination

WARNING

Health risk due to contamination of the centrifuge!

Due to the different places of use, there is a danger of contamination with biological samples. These samples can pose a serious health risk in the event of contact.

- Always ask what the intended purpose of the centrifuge is.
- Before maintenance/repair, make sure that the centrifuge has been cleaned of all contamination.
- If sample residues are to be expected when dismounting the centrifuge, clarify in advance what safety measures are to be taken (e.g., protection class of the rubber gloves).

Limited period of use

WARNING

Risk of injury due to use of accessories with a limited period of use!

The use of certain rotors, hangers and accessory parts is limited by time. This accessory is labelled with the maximum permitted number of operating cycles, or the expiration date and the maximum number of running cycles, or just with the expiration date. If not observed, serious accidents can result from material fatigue.

- Before test runs at the customer, always check accessories for their permissible use.

Damaged accessories

WARNING

Risk of injury due to using damaged accessories!

All accessories meant for the centrifuge chamber pose a serious risk of accident resulting in potentially serious injuries if they break during centrifugation.

- Before test runs, visually inspect the rotors and accessories for damage.
- Replace sealing rings if they show signs of crack formation, brittleness or wear.

2.4 Personnel qualifications

WARNING

Risk of injury if personnel are not sufficiently qualified!

If unqualified personnel work on the machine or stand in the danger zone of the machine, dangers arise which can cause serious injuries and considerable material damage.

- Have all tasks performed only by personnel who are qualified to do them.
- Keep unqualified personnel away from the danger zones.

In these instructions, the personnel qualifications specified below for the various fields of activity will be named:

Service technician

The service technician is familiar with how to perform service, measurement, diagnostic and repair work, as well as troubleshooting. He has participated in special training from Andreas Hettich GmbH & Co. KG, during which the necessary knowledge about the individual machine components has been imparted, and he has a valid training certificate.

The service technician has deeper knowledge of and experience with laboratory centrifuges and is able to professionally and safely perform the following work, among other things :

- Working in service mode
- Replacement of mechanical and electrical machine components
- Setting parameters, performing software diagnostics and updates
- Working on pneumatic and hydraulic machine components
- Performing safety checks
- Analysing and remedying errors and malfunctions

The manufacturer reserves the right to revoke the service technician's already issued authorization (certificate) if these service instructions are not complied with. The costs that arise when the manufacturer revokes the certificate are borne by the operating company.

Personnel are only approved as service technicians if it can be expected that they can perform their work reliably. Personnel whose responsiveness is influenced, e.g. by drugs, alcohol or medicine, are not approved.

When selecting personnel, observe the age- and job-specific regulations which apply at the site of use.

3 Error messages and signal outputs

3.1 Calling up error messages

It is only possible to query messages and changes when the rotor is stopped and the lid is open.

The following data records are stored in the control panel (A5):

- The last 11 error messages (➞ *'Error messages' on page 23*)
- The last 4 imbalance messages (➞ *'Imbalance messages' on page 24*)
- 7 change logs (➞ *'Change logs' on page 24*)

1. Switch on the mains switch and open the lid.
2. Switch off the mains switch and switch it back on (switch setting I).
3. The first time the display visibly changes (inverse display), press the *[STOP]* key.

   ➡ PROGRAM 1, LAST PROGRAM is displayed.
4. Press the *[STOP]* key repeatedly until the first error message is displayed (➞ *Chapter 3.2 'Error messages, imbalance messages and change logs' on page 23*).
5. Press the *[t]* key to display the next error messages.

   ➡ Error messages, imbalance messages and change logs (➞ *Chapter 3.2 'Error messages, imbalance messages and change logs' on page 23*) are displayed in succession.
6. To exit the display, press any key except for the *[t]* key.

3.2 Error messages, imbalance messages and change logs

Error messages

On the display, the corresponding error code, including number, is displayed for the respective error.

Error messages are stored and can be called up as needed (➡ *Chapter 3.2 'Error messages, imbalance messages and change logs' on page 23*).

The error message display consists of 4 lines:

Storage history*	Error code and number	Time	Date	Actual Speed	Actual Time	Actual Temperature
1	ERROR NO.: 12	T : 08 00	Date: 01 01 2015	N: 0	T : 0	TEMP:0
		h-ext: 0		h-int: 0		

Tab. 6: Error message

The 1st and 2nd lines provide information about the error number, error time and the associated speed and temperature values.

Storage history*	Error code	Time	Date	Actual Speed	Actual Time	Actual Temperature
1	1 CLEAR	T : 08 00	Date: 01 01 2015	N: 0	T : 0	TEMP:0
		h-ext: 0		h-int: 0		

Tab. 7: Display, deletion of error messages

The 3rd and 4th lines provide information about the time of the error deletion and the associated speed and temperature values.

h-ext — Hours of operation (value can be changed; see (➡ *Chapter 7.3 'Setting the hours of operation' on page 98*)

h-int — Total hours of operation (value cannot be changed)

*(1 = newest error)

Causes of error and their remedies are discussed in ➡ Chapter 4.2 'Error table' on page 28.

Imbalance messages

Imbalance messages are displayed after the error messages (➞ *Tab. 20 'Other error messages' on page 45*). The are set up like error messages:

Storage history*	Error code and number	Time	Date	Actual Speed	Actual Time	Actual Temperature
1	IMBAL NO.: 3	T:10 09	Date: 01 01 2015	N: 230	T : 7	TEMP:22
		h-ext: 0		h-int:0		

Tab. 8: Imbalance messages

Storage history*	Error code	Time	Date	Actual Speed	Actual Time	Actual Temperature
1	1 CLEAR: NO.	T:10 10	Date: 01 01 2015	N: 0	T : 19	TEMP:24
		h-ext: 0		h-int:0		

Tab. 9: Display, deletion of imbalance messages

* (1 = last imbalance)

Change logs

Change logs are displayed after the imbalance messages (➞ *Chapter 3.2 'Error messages, imbalance messages and change logs' on page 23*):

EVENT NO.	Time	Date	Hours of operation	Total Hours of operation
1	T:12 00	01 01 2015	7	150

Tab. 10: Change logs

EVENT NO.	Explanation
1	The control panel has been initialized. The setting for which program (PROGRAM 1, LAST PROGRAM) is displayed after switching on was changed.
2	Date and time when the machine version was set (in initialization mode).
3	Date and time were set.
4	Rotor was changed (a new rotor was detected).
5	Hours of operation were changed.
6	Offset alignment of the temperature sensors was performed.
7	Program locking was changed.

Tab. 11: List/explanation of the EVENT numbers

3.3 Visual and acoustic error messages

LED display on the frequency converter (A2)

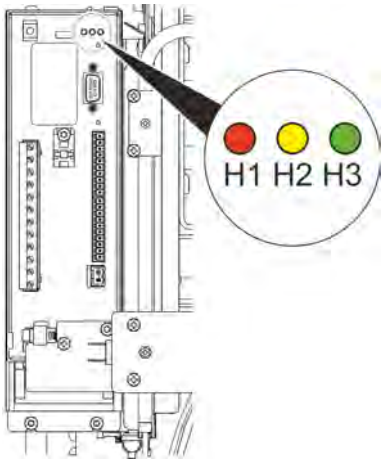

Fig. 6: LED display, frequency converter

The frequency converter can be accessed by removing the rear panel (➡ *Chapter 6.2 'Rear wall' on page 54*). On the frequency converter, there are three status LEDs in the colours red (H1), yellow (H2) and green (H3) at the upper right (*Fig. 6*).

Device status	red (H1)	yellow (H2)	green (H3)
Supply voltage is applied	Off	Off	On
Ready for operation	Off	On	On
In operation/active	Off	flashing	On
Warning	On	on/flashing	On
Error	flashing (flashing code)	Off	On

Malfunctions that occur during the operating period are indicated by a flashing code of LED H1 (red) on the frequency converter.

The flashing code allows the type of error to be identified.

Flashing code H1	Explanation	Cause/solution
1x	Collective fault	Manufacturer-specific error message, can only be analysed by manufacturer.
2x	Undervoltage shutdown	Check the mains supply.
3x	Overcurrent shutdown	Short circuit, ground fault: Check the wiring of the power connections, check the motor winding, check the neutral conductor and grounding.
4x	Overvoltage shutdown	Overvoltage from the mains: Check the mains voltage; restart the device. Overvoltage due to feeding back of motor (generator operation).
5x	Motor protection shutdown	Motor overloaded (after actual monitoring).
6x	Device protection shutdown	Device overloaded.
7x	Motor temperature too high	Motor overloaded.

Tab. 12: Malfunction messages, flashing code H1 (red LED)

Acoustic signals

Three settings for acoustic signals can be selected in the program via the display:

1. Open the lid.
2. Keep the *[t]* key pressed for 8 seconds.
   ➡ After 8 seconds, SOUND / BELL is displayed.
3. Set the desired function (OFF, ON1, ON2) using the rotary knob.
4. Press the *[START]* key to save the setting.
   ➡ As confirmation, *** ok *** is briefly displayed.

Setting	Acoustic signal
OFF	■ When a malfunction occurs, at 2-second intervals
ON 1	■ When a malfunction occurs, at 2-second intervals ■ After ending the centrifugation run and the rotor is at a standstill, at 30-second intervals
ON 2	■ When a malfunction occurs, at 2-second intervals ■ After ending the centrifugation run and the rotor is at a standstill, at 30-second intervals ■ Every time a button is pushed

3.4 Regenerating error messages

Switch on the device and call up stored error messages (➡ *Chapter 3.2 'Error messages, imbalance messages and change logs' on page 23*). If the error messages have already been deleted, start the centrifugation run so that the error message appears again:

1. Make sure that the lid lock, rotor, buckets and centrifuge chamber are completely intact.
2. Start test run with properly tared rotor.
3. Observe the error message on the display (➡ *Chapter 3.2 'Error messages, imbalance messages and change logs' on page 23*).

4 Error detection and remedy

4.1 Error determination procedure

To determine the error, proceed as follows:

1. Make sure there is a current supply (house installation).
2. Ensure mains voltage of the following components (see connection diagram):
   - Mains cable
   - Device plug (X1)
   - Mains switch (F2)
   - Supply board (A1), plugs X21 and X29

> ***Procedure in event of display malfunction***
>
> *If the display does not work, remove the rear panel (➡ Chapter 6.2 'Rear wall' on page 54) and observe the LED status display on the frequency converter (A2) (➡ Chapter 3.3 'Visual and acoustic error messages' on page 25).*

3. Record the error messages on the display and allocate:
4. Troubleshoot by following the previous steps and according to the instructions in ➡ *Chapter 4.2 'Error table' on page 28*.
5. Perform function check and test run (➡ *Chapter 6.26 'Performing function check after repair' on page 88*).

4.2 Error table

Error type	Remarks/regarding	Page
CONTROL ERROR	Lid lock, standstill messages, error in EPROM and RAM, error in the program sequence, hardware error in control panel (A5), control panel (A5) does not detect the expected signal	➦ *29*
FC/CCI ERROR	Frequency converter (A2), error in the computer part, mains voltage	➦ *32*
°C/* ERROR	Actual/nominal temperatures, overtemperature and -pressure, temperature sensors 17	➦ *36*
SER I/O ERROR	Control panel (A5)	➦ *41*
N and N > ROTOR MAX	Rotor speed, error in the input program	➦ *43*
TACHO-ERROR	Tacho pulses	➦ *44*
LOCK ERROR	Program locking plug	➦ *45*
IMBALANCE	Imbalance on the motor axis	➦ *45*
ROTOR CODE	Rotor code	➦ *45*
MAINS INTERRUPT	Mains interruption	➦ *45*
VERSION-ERROR	Differences in the initialization of the supply board (A1), control panel (A5) and frequency converter (A2)	➦ *45*
INDEFINITE	Unspecified error	➦ *45*
BATT	Battery voltage	➦ *45*

Tab. 13: Overview of error messages on the display

Error messages on the display

Error message and description	Cause of error	Troubleshooting
CONTROL-ERROR 04 Lid lock open during centrifugation. ■ Rotor runs down until *'Open lid'* enable. ■ Cooling continues to the temperature setpoint.	■ Lid lock (Y1) defective ■ Loose contact in the line or in the plug of the lid lock (Y1) ■ Ribbon cable to the control panel (A5) defective ■ Supply board (A1) or control panel (A5) defective	■ Replace defective component, part or module. Clear error message: ■ Open and close the lid or reset the mains ➦ *Chapter 4.3 'Mains-Reset' on page 46*. Info: On the control panel (A5), after deleting the error message, the error message CONTROL ERROR 06 or CONTROL ERROR 08 can appear on the display.
CONTROL-ERROR 06 Lid lock message is incorrect: Control panel (A5) signals that the lid lock is open; supply board (A1) signals that the lid lock is closed. ■ Rotor runs down until *'Open lid'* enable. ■ Cooling continues to the temperature setpoint.	■ Ribbon cable to the control panel (A5) defective ■ Supply board (A1) or control panel (A5) defective	■ Replace defective component, part or module. Clear error message: ■ Reset the mains ➦ *Chapter 4.3 'Mains-Reset' on page 46*.
CONTROL-ERROR 07 Lid lock message is incorrect: Control panel (A5) signals that the lid lock is closed; supply board (A1) signals that the lid lock is open. ■ Rotor runs down until *'Open lid'* enable. ■ Cooling unit switches off.	■ Ribbon cable to the control panel (A5) defective ■ Supply board (A1) or control panel (A5) defective	■ Replace defective component, part or module. Clear error message: ■ Reset the mains ➦ *Chapter 4.3 'Mains-Reset' on page 46*.
CONTROL-ERROR 08 Standstill message is incorrect: Control panel (A5) signals standstill; supply board does not signal standstill. ■ Rotor runs down with braking. ■ Cooling continues to the temperature setpoint.	■ Ribbon cable to the control panel (A5) defective ■ Supply board (A1) or control panel (A5) defective	■ Replace defective component, part or module. Clear error message: ■ Reset the mains ➦ *Chapter 4.3 'Mains-Reset' on page 46*.

Error message and description	Cause of error	Troubleshooting
CONTROL-ERROR 09 Standstill message is incorrect: Control panel (A5) does not signal standstill; supply board signals standstill. ■ Rotor runs down with braking. ■ Cooling continues to the temperature setpoint.	■ Ribbon cable to the control panel (A5) defective ■ Supply board (A1) or control panel (A5) defective	■ Replace defective component, part or module. Clear error message: ■ Reset the mains ➡ *Chapter 4.3 'Mains-Reset' on page 46*.
CONTROL-ERROR 26 Input of the control panel (A5) does not detect the expected signal. ■ Device stops.	■ Ribbon cable between the control panel (A5) and supply board (A1) defective ■ Supply board (A1) or control panel (A5) defective	■ Replace defective component, part or module. Clear error message: ■ Reset the mains ➡ *Chapter 4.3 'Mains-Reset' on page 46*.
CONTROL – ERROR 90 Error in EPROM of the control panel (A5) ■ Operation not possible.	■ Control panel (A5) defective	■ Replace defective component. Clear error message: ■ Reset the mains ➡ *Chapter 4.3 'Mains-Reset' on page 46*. If the error message is still there, replace the control panel (A5) ➡ *Chapter 6.10 'Control panel (A5)' on page 70*.
CONTROL – ERROR 91 Error in the RAM of the control panel (A5) ■ Operation not possible.	■ Control panel (A5) defective	■ Replace defective component. Clear error message: ■ Reset the mains ➡ *Chapter 4.3 'Mains-Reset' on page 46*. If the error message is still there, replace the control panel (A5) ➡ *Chapter 6.10 'Control panel (A5)' on page 70*.

Error message and description	Cause of error	Troubleshooting
CONTROL – ERROR 92 Difference in memory areas of RAM and EEPROM ■ Display: – CONTROL – ERROR 92 – BATT flashes on the control panel (A5)	■ BATT flashes: Battery not connected or dead ■ BATT does not flash: Control panel (A5) defective	■ Connect or replace battery ➦ *Chapter 6.12 'Battery' on page 73*. Reinitialize machine ➦ *Chapter 7.1.1 'Initializing the centrifuge' on page 90*. ■ Replace control panel (A5) ➦ *Chapter 6.10 'Control panel (A5)' on page 70*. Reinitialize machine ➦ *Chapter 7.1.1 'Initializing the centrifuge' on page 90*. If a new control panel (A5) or battery is not available, then the control panel (A5) can also be reinitialized. The mains switch of the machine must then not be switched off anymore. Clear error message: ■ Reset the mains ➦ *Chapter 4.3 'Mains-Reset' on page 46*. ■ After reinitialization, the error message CONTROL ERROR 92 appears again. ■ Reset the mains ➦ *Chapter 4.3 'Mains-Reset' on page 46*. If the error message is still there, replace the control panel (A5) ➦ *Chapter 6.10 'Control panel (A5)' on page 70*.
CONTROL – ERROR 94 Error found in the program sequence (watchdog) Hardware error in the control panel (A5) ■ Operation not possible.	■ Incorrect program sequence with program interruption ■ Control panel (A5) defective	■ Replace defective control panel (A5). Clear error message: ■ Reset the mains ➦ *Chapter 4.3 'Mains-Reset' on page 46*. If the error message is still there, replace the control panel (A5) ➦ *Chapter 6.10 'Control panel (A5)' on page 70*.
CONTROL – ERROR 95 Error in the program sequence: Impermissible operating state ■ Operation not possible.	■ Impermissible operating state localized ■ Control panel (A5) defective	■ Replace defective control panel (A5). Clear error message: ■ Reset the mains ➦ *Chapter 4.3 'Mains-Reset' on page 46*. If the error message is still there, replace the control panel (A5) ➦ *Chapter 6.10 'Control panel (A5)' on page 70*.

Error message and description	Cause of error	Troubleshooting
CONTROL-ERROR 97 Error in the EEPROM of the control panel (A5) ■ Operation not possible.	■ Control panel (A5) defective	■ Replace defective control panel (A5). Clear error message: ■ Reset the mains ➡ *Chapter 4.3 'Mains-Reset' on page 46*. If the error message is still there, replace the control panel (A5) ➡ *Chapter 6.10 'Control panel (A5)' on page 70*.
CONTROL – ERROR 99 Hardware error in the error management system of the control panel (A5) ■ Operation not possible.	■ Malfunction in the error management system of the control panel (A5) ■ Control panel (A5) defective	■ Replace defective control panel (A5). Clear error message: ■ Reset the mains ➡ *Chapter 4.3 'Mains-Reset' on page 46*. If the error message is still there, replace the control panel (A5) ➡ *Chapter 6.10 'Control panel (A5)' on page 70*.

Tab. 14: Control error messages

Error message and description	Cause of error	Troubleshooting
FU / CCI - ERROR 60 Enable line controls the hardware enable of the converter; this is checked after a mains reset. If this check fails, ERROR 60 is displayed. Enable signal not correctly transferred to frequency converter (A2) ■ Operation not possible.	■ Associated lines, ribbon cable, plug connections from the following components or the components themselves are defective: – Control panel – Supply board (A1) – Converter board – Frequency converter	■ When the FC is enabled (lid closed), the yellow LED on the converter must light up and 24 – 27 V must be applied at X2 between pins 8 and 14. ■ Rule out the control panel as a source of error; disconnect the ribbon cable from the control panel and, at the plug connection (ribbon cable), bridge pin 4 (enable line) with pin 16 (GND) with a jumper. If LED H2 lights up then, the error is on the control panel. ■ Rule out the ribbon cable and supply board as sources of error; perform the same test as above (place jumper between pins 4 and 16) and measure at X7 of the supply board between pin 5 (GND) and pin 1 (enable): – Here, between 15 and 20 V (typically 18 V) must be applied. – When the jumper is removed, then this must be 0 V.

Error message and description	Cause of error	Troubleshooting
		■ If 0 V should not be measured, the ribbon cable must be checked; otherwise, the supply board is defective. ■ Check the frequency converter. Check whether there is 24 V on the converter; measure at X2 between pin 14 (GND) and pin 7 (+24 V). If 24 V are available, then test the enable input on the FC; to do this, bridge pin 8 (ENPO) with pin 7 (+24 V). If 24 V are not available or the LED H2 is not lit up when ENPO has 24 V applied to it, then the FC is defective. If the test is successful, the source of error can only be on the converter board or on the connection cable or plug connector. ■ Replace defective component, part or module. Clear error message: ■ Reset the mains ➡ *Chapter 4.3 'Mains-Reset' on page 46*.
Note for error messages FC/CCI ERROR 61 to FC/CCI ERROR 75 If an error occurs, the red LED on the frequency converter (A2) flashes. The control panel (A5) receives the information from the frequency converter (A2) via the supply board (A1). If an error message comes from the control panel (A5) and the LED of the frequency converter (A2) does not flash, one of the following cases applies: ■ Ribbon cable from the frequency converter (A2) to the supply board (A1) defective ■ Ribbon cable from the supply board (A1) to the control panel (A5) defective ■ Supply board (A1) or frequency converter (A2) defective ■ Converter board defective		■ Replace defective component, part or module. ■ Check the voltage on the supply board (A1) at plug X7, pin 4 – 5 (plug X7 plugged in). – No error: 0 V – Error: 5 V
FU / CCI - ERROR 61 Error in the computer part ■ Frequency converter (A2) switches off automatically. ■ Rotor runs down unbraked. ■ Operation not possible. ■ Cooling continues to the temperature setpoint.	■ See above "Note for error messages FC/CCI ERROR 61 to FC/CCI ERROR 75"	■ Replace defective component, part or module. Clear error message: ■ Reset mains with 2 minutes waiting time ➡ *Chapter 4.3 'Mains-Reset' on page 46*.

Error message and description	Cause of error	Troubleshooting
FU / CCI - ERROR 62 Mains voltage < 320 V AC or one phase missing ■ Frequency converter (A2) switches off automatically. ■ Rotor runs down unbraked. ■ Operation not possible. ■ Cooling continues to the temperature setpoint.	■ See above "Note for error messages FC/CCI ERROR 61 to FC/CCI ERROR 75" ■ Supply voltage too low ■ Defective component in the power supply (or mains filter)	■ Replace defective component, part or module. Clear error message: ■ Reset mains with 2 minutes waiting time ➦ *Chapter 4.3 'Mains-Reset' on page 46*.
FU / CCI - ERROR 63 Overcurrent ■ Frequency converter (A2) switches off automatically. ■ Rotor runs down unbraked. ■ Operation not possible. ■ Cooling continues to the temperature setpoint.	■ See above "Note for error messages FC/CCI ERROR 61 to FC/CCI ERROR 75" ■ Motor has excessively low impedance ■ Short-circuit in the motor ■ Defective motor (short circuit or winding short, ground fault or insulation error) ■ Defective converter (faulty current measurement)	■ Replace defective component, part or module. Clear error message: ■ Reset mains with 2 minutes waiting time ➦ *Chapter 4.3 'Mains-Reset' on page 46*.
FU / CCI - ERROR 64 Overvoltage (voltage in the intermediate circuit > 640 V DC ■ Frequency converter (A2) switches off automatically. ■ Rotor runs down unbraked. ■ Operation not possible. ■ Cooling continues to the temperature setpoint.	■ See above "Note for error messages FC/CCI ERROR 61 to FC/CCI ERROR 75" ■ Brake chopper (A3) defective	■ Replace defective component. Clear error message: ■ Reset mains with 2 minutes waiting time ➦ *Chapter 4.3 'Mains-Reset' on page 46*.
FU / CCI - ERROR 65 I x t shutdown of the motor; motor current too high for longer time ■ Frequency converter (A2) switches off automatically. ■ Rotor runs down unbraked. ■ Operation not possible. ■ Cooling continues to the temperature setpoint.	■ See above "Note for error messages FC/CCI ERROR 61 to FC/CCI ERROR 75" ■ Motor defective (impedance too low, individual winding resistances too small) ■ Motor sluggish (bearing damage)	■ Replace defective component, part or module. Clear error message: ■ Reset mains with 2 minutes waiting time ➦ *Chapter 4.3 'Mains-Reset' on page 46*.

Error message and description	Cause of error	Troubleshooting
FU / CCI - ERROR 66 I x t shutdown of the frequency converter (A2) ■ Frequency converter (A2) switches off automatically. ■ Rotor runs down unbraked. ■ Operation not possible. ■ Cooling continues to the temperature setpoint.	■ See above "Note for error messages FC/CCI ERROR 61 to FC/CCI ERROR 75" ■ Motor defective (impedance too low, individual winding resistances too small) ■ Motor sluggish (bearing damage)	■ Replace defective component, part or module. Clear error message: ■ Reset mains with 2 minutes waiting time ➡ *Chapter 4.3 'Mains-Reset' on page 46*.
FU / CCI - ERROR 67 Overtemperature in the motor ■ Frequency converter (A2) switches off automatically. ■ Rotor runs down unbraked. ■ Operation not possible. ■ Cooling continues to the temperature setpoint.	■ See above "Note for error messages FC/CCI ERROR 61 to FC/CCI ERROR 75" ■ Overtemperature switch in the motor opens due to high motor temperature ■ Wiring from the brake resistor malfunctioning (FC X1 terminal)	Check the voltage at terminal 26 – 33 on the frequency converter (A2). ■ 24 V: Overtemperature switch in the motor tripped (wait 10 minutes) Clear error message: ■ Reset mains with 2 minutes waiting time ➡ *Chapter 4.3 'Mains-Reset' on page 46*.
FU / CCI - ERROR 68 Overtemperature in the frequency converter (A2) ■ Frequency converter (A2) switches off automatically. ■ Rotor runs down unbraked. ■ Operation not possible. ■ Cooling continues to the temperature setpoint.	■ See above "Note for error messages FC/CCI ERROR 61 to FC/CCI ERROR 75" ■ Full-load operation with ambient temperature above 45 °C ■ FC overload ■ Ambient temperature too high ■ FC defective	■ Replace defective component. Clear error message: ■ Reset mains with 2 minutes waiting time ➡ *Chapter 4.3 'Mains-Reset' on page 46*.
FU / CCI - ERROR 69 EEPROM in the frequency converter (A2) defective ■ Frequency converter (A2) switches off automatically. ■ Rotor runs down unbraked. ■ Operation not possible. ■ Cooling continues to the temperature setpoint.	■ Frequency converter (A2) defective ■ Ribbon cable defective ■ Supply board (A1) defective	■ Replace defective component. Clear error message: ■ Reset mains with 2 minutes waiting time ➡ *Chapter 4.3 'Mains-Reset' on page 46*.

Error message and description	Cause of error	Troubleshooting
FU / CCI - ERROR 70 Parametrization of the frequency converter (A2) incorrect ■ Rotor runs down until *'Open lid'* enable. ■ Operation not possible. ■ Cooling continues to the temperature setpoint.	■ See above "Note for error messages FC/CCI ERROR 61 to FC/CCI ERROR 75" **Info:** This error only occurs in connection with frequency converters E3415 and E3614 (starting from control panel firmware version 8.xxx).	■ Replace defective component, part or module. Clear error message: ■ Open the lid. ■ Reset the mains ➦ *Chapter 4.3 'Mains-Reset' on page 46*. **Info:** The error can only be cleared starting from control panel firmware version 8.060.
FU / CCI - ERROR 75 Checksum error in the EPROM in the frequency converter (A2) ■ Rotor runs down until *'Open lid'* enable. ■ Operation not possible. ■ Cooling continues to the temperature setpoint.	■ See above "Note for error messages FC/CCI ERROR 61 to FC/CCI ERROR 75" **Info:** This error only occurs in connection with frequency converters E3415 and E3614 (starting from control panel firmware version 8.xxx).	■ Replace defective component, part or module. Clear error message: ■ Reset the mains ➦ *Chapter 4.3 'Mains-Reset' on page 46*. ■ Reinitialize machine. ➦ *Chapter 7.1.1 'Initializing the centrifuge' on page 90* **Info:** The error can only be cleared starting from control panel firmware version 8.060.

Tab. 15: FC/CCI ERROR

Error message and description	Cause of error	Troubleshooting
°C/*-ERROR 50 Overpressure in the cooling system Only on centrifuges with an overpressure switch at the plug X11 / SB ■ Rotor runs down until *'Open lid'* enable. ■ Cooling unit switches off.	■ Heat dissipation prevented: – Ambient temperatures too high – Compressor or solenoid valves defective – Capillary tubes clogged or heat exchanger contaminated ■ Overpressure switch (F6) opened: – Overpressure in the cooling system – Fan on the condenser defective ■ SB defective	■ Clean the heat exchanger. ■ On the supply board (A1), measure at plug X9, pin 2 – pin 5. If there is voltage applied, the fan is defective. ■ On the supply board (A1), measure at plug X11, pin 3 and X13. If voltage (17 V) is applied, the switching contact of the overpressure switch is open or defective or the current path is interrupted. If there is a pressure up to 21 bar in the refrigeration system, the switching contact must be closed; at a pressure above 28 bar, the switching contact must be open. ■ Check the overpressure switch (F6). Allow the device to cool to room temperature. On the

Error message and description	Cause of error	Troubleshooting
		supply board (A1), disconnect the plug X11 and measure between pin 2 and pin 3: – 0 Ω (switch closed) OK – ∞ Ω (switch open) NOK Clear error message: ■ Reset the mains ➦ *Chapter 4.3 'Mains-Reset' on page 46*.
°C/*-ERROR 51 Overtemperature on the condenser (temperature above 58 °C) ■ Rotor runs down until *'Open lid'* enable. ■ Cooling unit switches off.	■ Condenser contaminated ■ Fan defective ■ Temperature sensor cable on the condenser (T3) defective ■ Loose contact in the temperature sensor plug on the condenser (T3) ■ Supply board (A1) defective	■ Check the voltage on the supply board (A1) at plug X1, pin 1 – 2 (plug X1 plugged in) – Voltage at 25 °C: 2.98 V (± 20 mV) – Voltage at 58 °C: 3.31 V (± 20 mV) ■ Replace defective component, part or module. Clear error message: ■ Reset the mains ➦ *Chapter 4.3 'Mains-Reset' on page 46*.
°C/*-ERROR 52 Overtemperature in the centrifuge chamber ■ Rotor runs down until *'Open lid'* enable. ■ Cooling unit switches off.	■ Cable of the overtemperature switch (T2) defective ■ Loose contact in the plug of the overtemperature switch (T2) ■ Supply board (A1) defective	■ Check the voltage on the supply board (A1) at plug X2, pin 1 – 2 (plug X2 plugged in). – Overtemperature switch open: 0 V – Overtemperature switch closed: 18 V ■ Replace defective component, part or module. Clear error message: ■ Reset the mains ➦ *Chapter 4.3 'Mains-Reset' on page 46*.

Error message and description	Cause of error	Troubleshooting
°C/*-ERROR 53 Lower temperature sensor in the centrifuge chamber has a short circuit (voltage < 0.50 V) or an interruption (voltage > 4.50 V). ■ Rotor runs down until *'Open lid'* enable. ■ Cooling unit switches off.	■ Temperature sensor (T2) defective ■ Cable of the temperature sensor (T2) defective ■ Loose contact in the plug of the temperature sensor (T2) ■ Supply board (A1) defective	■ Check the voltage on the supply board (A1) at plug X2, pin 4 – 5 (plug X2 plugged in). – Voltage at 25 °C: 2.98 V (± 20 mV) Temperature change of 1 K results in voltage change of 10 mV. ■ Replace defective component, part or module. Clear error message: ■ Reset the mains ➡ *Chapter 4.3 'Mains-Reset' on page 46*.
°C/*-ERROR 54 Upper temperature sensor in the centrifuge chamber has a short circuit or an interruption (permissible range: 2.50 V at -23 °C to 3.77 V at 104 °C) ■ Rotor runs down until *'Open lid'* enable. ■ Cooling unit switches off.	■ Temperature sensor (T1) defective ■ Cable of the temperature sensor (T1) defective ■ Loose contact in the plug of the temperature sensor (T1) ■ Control panel (A5) defective	■ Check the voltage on the supply board (A1) at plug X2, pin 1 – 2 (plug X2 plugged in). – Voltage at 25 °C: 2.98 V (± 20 mV) Temperature change of 1 K results in voltage change of 10 mV. ■ Replace defective component, part or module. Clear error message: ■ Reset the mains ➡ *Chapter 4.3 'Mains-Reset' on page 46*.
°C/*-ERROR 55 Temperature sensor at the condenser has a short circuit (voltage < 0.50 V) or an interruption (voltage > 4.50 V). ■ Rotor runs down until *'Open lid'* enable. ■ Cooling unit switches off.	■ Temperature sensor at the condenser (T3) defective ■ Sensor cable defective ■ Loose contact in the plug ■ Supply board (A1) defective	■ Check the voltage on the supply board (A1) at plug X1, pin 1 – 2 (plug X1 plugged in). – Voltage at 25 °C: 2.98 V (± 20 mV) Temperature change of 1 K results in voltage change of 10 mV. ■ Replace defective component, part or module. Clear error message: ■ Reset the mains ➡ *Chapter 4.3 'Mains-Reset' on page 46*.

Error message and description	Cause of error	Troubleshooting
°C/*-ERROR 56 Temperature sensor at the suction pipe has a short circuit (voltage < 0.50 V) or an interruption (voltage > 4.50 V). ■ Rotor runs down until *'Open lid'* enable. ■ Cooling unit switches off.	■ Temperature sensor at suction pipe (T4) defective ■ Temperature sensor cable at the suction pipe (T4) defective ■ Loose contact in the plug of the temperature sensor at the suction pipe (T4) ■ Supply board (A1) defective	■ Check the voltage on the supply board (A1) at plug X3, pin 3 – 4 (plug X3 plugged in). – Voltage at 25 °C: 2.98 V (± 20 mV) Temperature change of 1 K results in voltage change of 10 mV. ■ Replace defective component, part or module. Clear error message: ■ Reset the mains ➦ *Chapter 4.3 'Mains-Reset' on page 46*.
Note for °C/* ERROR 58.X error messages Errors can also occur in the case of unfavourable program chaining. One example would be strong cooling down in the first program followed by strong heating up in the next program. In such a case, it is possible that the temperature first drops before it rises again, which would result in °C/* ERROR 58. The E58 DIFF limit value monitoring is activated when the actual temperature is in the range of +2 °C – -4 °C from the temperature setpoint at the start. If the actual temperature at the start lies within the limit values +2 °C – -4 °C from the temperature setpoint, ERROR 58 monitoring starts immediately in the limits of ERROR TEMPERATURE +/- XX °C. Starting from version V 5.620, the setting range is ± 5 °C – ± 25 °C as well as the OFF setting. This way, temperature monitoring can be deactivated.		
°C/*-ERROR 58.0 Actual temperature less than temperature setpoint (min. 5 °C), actual temperature continues to drop. Difference greater than value "E58 DIFF", then error message ERROR after 2 min. ■ Rotor runs down until *'Open lid'* enable. ■ Cooling unit switches off.	■ Cooling unit no longer switches off after start. Cooling system, temperature sensor or supply board (A1) defective ■ See above, note for °C/* ERROR 58 error messages	■ Replace defective component, part or module. ■ If there is a defect, increase "E58 DIFF" value. Clear error message: ■ Reset the mains ➦ *Chapter 4.3 'Mains-Reset' on page 46*.

Error message and description	Cause of error	Troubleshooting
°C/*-ERROR 58.1 Actual temperature greater than temperature setpoint (min. 5 °C), actual temperature continues to rise. Difference greater than value "E58 DIFF", then error message ERROR after 2 min. ■ Rotor runs down until *'Open lid'* enable. ■ Cooling unit switches off.	■ Cooling unit no longer switches on after start. Cooling system, temperature sensor or supply board (A1) defective ■ See above, note for °C/* ERROR 58 error messages	■ Replace defective component, part or module. ■ If there is a defect, increase "E58 DIFF" value. Clear error message: ■ Reset the mains ➡ *Chapter 4.3 'Mains-Reset' on page 46*.
°C/*-ERROR 58.6 Temperature setpoint reached at start; actual temperature continues to rise. If the difference more than the value "ERROR TEMPERATURE ± XX°C" for longer than 2 min, then an error message appears. ■ Rotor runs down until *'Open lid'* enable. ■ Cooling unit switches off.	■ Cooling unit no longer switches on during run. Cooling system, temperature sensor or supply board (A1) defective ■ See above, note for °C/* ERROR 58 error messages	■ Replace defective component, part or module. ■ If there is no defect, increase the value "ERROR TEMPERATURE ± XX°C". If there is no defect, increase the value "ERROR TEMPERATURE ± XX°C". Clear error message: ■ Reset the mains ➡ *Chapter 4.3 'Mains-Reset' on page 46*.
°C/*-ERROR 58.7 Temperature setpoint reached at start; actual temperature continues to drop. If the difference more than the value "ERROR TEMPERATURE ± XX°C" for longer than 2 min, then an error message appears. ■ Rotor runs down until *'Open lid'* enable. ■ Cooling unit switches off.	■ Cooling unit no longer switches off during run. Cooling system, temperature sensor or supply board (A1) defective ■ See above, note for °C/* ERROR 58 error messages	■ Replace defective component, part or module. ■ If there is no defect, increase the value "ERROR TEMPERATURE ± XX°C". Clear error message: ■ Reset the mains ➡ *Chapter 4.3 'Mains-Reset' on page 46*.

Tab. 16: Temperature error messages

Error message and description	Cause of error	Troubleshooting
SER I/O-ERROR 30 Control panel (A5) has no connection to the supply board (A1) or to the frequency converter (A2) via the serial interface. ■ Rotor runs down until *'Open lid'* enable.	■ Ribbon cable to the control panel (A5) defective ■ Supply board (A1) or control panel (A5) defective ■ Converter board defective	■ Replace defective component, part or module. Clear error message: ■ Reset the mains ➦ *Chapter 4.3 'Mains-Reset' on page 46*.
SER I/O-ERROR 31 Control panel (A5) has no connection to the frequency converter (A2) via the serial interface. ■ Rotor runs down until *'Open lid'* enable. ■ Cooling continues to the temperature setpoint.	■ Ribbon cable to the frequency converter (A2) defective ■ No voltage on the frequency converter (A2) ■ Serial interface (terminals 49 and 50) not connected to frequency converter (A2) ■ Supply board (A1), control panel (A5) or frequency converter (A2) defective ■ Converter board defective	■ Replace defective component, part or module. Clear error message: ■ Reset the mains ➦ *Chapter 4.3 'Mains-Reset' on page 46*.
SER I/O-ERROR 32 Control panel (A5) has no connection to the supply board (A1) via the serial interface. ■ Rotor runs down until *'Open lid'* enable.	■ Incorrect machine or cooling unit version set on the supply board (A1) ■ Supply board (A1) or control panel (A5) defective ■ Converter board defective	■ Replace defective component, part or module. ■ Correctly plug in jumper A.0 – A.7 ➦ *Chapter 1.3 ' Jumper assignment' on page 13* and perform "Mains reset 1" ➦ *Chapter 4.3 'Mains-Reset' on page 46*. Clear error message: ■ Reset the mains ➦ *Chapter 4.3 'Mains-Reset' on page 46*.
SER I/O-ERROR 33 Control panel (A5) receives incorrect data from the supply board (A1) or from the frequency converter (A2). ■ Rotor runs down until *'Open lid'* enable.	■ Ribbon cable to the control panel (A5) defective ■ Supply board (A1), control panel (A5) or frequency converter (A2) defective	■ Replace defective component, part or module. Clear error message: ■ Reset the mains ➦ *Chapter 4.3 'Mains-Reset' on page 46*.
SER I/O-ERROR 34 Control panel (A5) receives incorrect data from the frequency converter (A2). ■ Rotor runs down until *'Open lid'* enable. ■ Cooling continues to the temperature setpoint.	■ Ribbon cable to the control panel (A5) defective ■ Ribbon cable to the frequency converter (A2) defective ■ Supply board (A1), control panel (A5) or frequency converter (A2) defective	■ Replace defective component, part or module. Clear error message: ■ Reset the mains ➦ *Chapter 4.3 'Mains-Reset' on page 46*.

Error message and description	Cause of error	Troubleshooting
SER I/O-ERROR 35 Control panel (A5) receives incorrect data from the supply board (A1). ■ Rotor runs down until *'Open lid'* enable.	■ Ribbon cable to the control panel (A5) defective ■ Supply board (A1) or control panel (A5) defective	■ Replace defective component, part or module. Clear error message: ■ Reset the mains ➡ *Chapter 4.3 'Mains-Reset' on page 46*.
SER I/O-ERROR 36 Frequency converter (A2) sends the signal "NAK" ("No confirmation") to the control panel (A5) if command not recognized. ■ Rotor runs down until *'Open lid'* enable. ■ Cooling continues to the temperature setpoint.	■ Ribbon cable to the control panel (A5) defective ■ Ribbon cable to the frequency converter (A2) defective ■ Supply board (A1), control panel (A5) or frequency converter (A2) defective	■ Replace defective component, part or module. Clear error message: ■ Reset the mains ➡ *Chapter 4.3 'Mains-Reset' on page 46*.
SER I/O-ERROR 37 Supply board (A1) sends the signal "NAK" ("No confirmation") to the control panel (A5) if command not recognized ■ Rotor runs down until *'Open lid'* enable.	■ Ribbon cable to the control panel (A5) defective ■ Supply board (A1), control panel (A5) or frequency converter (A2) defective	■ Replace defective component, part or module. Clear error message: ■ Reset the mains ➡ *Chapter 4.3 'Mains-Reset' on page 46*.

Tab. 17: SER I/O ERROR

Error message and description	Cause of error	Troubleshooting
N > MAX 05 Speed is 250 rpm faster than the maximum rotor speed. ■ Rotor runs down until *'Open lid'* enable. ■ Cooling continues to the temperature setpoint.	■ Insulation of the speed sensor line defective ■ Loose contact on the speed sensor line ■ Speed sensor defective ■ Ribbon cable to the control panel (A5) defective ■ Supply board (A1), control panel (A5) or frequency converter (A2) defective	■ Replace defective component, part or module. Clear error message: ■ Perform reset ➦ *Chapter 4.3 'Mains-Reset' on page 46*.
N < MIN 13 Speed is more than 5 % lower than the nominal rotor speed. ■ Rotor runs down until *'Open lid'* enable. ■ Cooling continues to the temperature setpoint.	■ Motor is sluggish (bearing damage) ■ Motor winding defective ■ Motor defective ■ Loose contact in the electrical connections ■ Frequency converter (A2) defective ■ Enable signal to the frequency converter (A2) interrupted during centrifugation; see FC/CCI Error 60.	■ Replace defective component, part or module. Clear error message: ■ Open lid <u>and</u> reset mains ➦ *Chapter 4.3 'Mains-Reset' on page 46*.
N > ROTOR-MAX 96 Error in the input program ■ Operation not possible.	■ Nominal speed/RCF greater than the permissible rotor speed/RCF	■ Replace defective component, part or module. ■ Replace defective component, part or module. Clear error message: ■ Open lid <u>or</u> reset mains ➦ *Chapter 4.3 'Mains-Reset' on page 46*. ■ Reduce the nominal speed/RCF in the input program to the permissible rotor speed/RCF

Tab. 18: Speed error messages

Error message and description	Cause of error	Troubleshooting
TACHO-ERROR 01 Tacho pulses drop out during rotation. ■ Rotor runs down to a standstill.	■ Speed sensor defective or loose contact on the plug ■ Ribbon cable to the control panel (A5) or to the frequency converter (A2) defective ■ Supply board (A1), control panel (A5) or frequency converter (A2) defective	■ Replace defective component, part or module. Measure tacho pulses at pin 4 – 2 of plug X5 on the supply board (A1). Clear error message: ■ Open the lid. ■ Turn the rotor by hand. Perform a reset during rotation. Info: On the control panel (A5), after deleting the error message, the error message CONTROL ERROR 08 can appear on the display.
TACHO-ERROR 02 Control panel (A5) does not receive any tacho pulses after the start. ■ Rotor runs down to a standstill.	■ Motor not connected or defective ■ Speed sensor defective or loose contact on the plug ■ Ribbon cable to the control panel (A5) or to the frequency converter (A2) defective ■ Supply board (A1), control panel (A5) or frequency converter (A2) defective ■ No enable signal on the frequency converter (A2) (green LED does not light up)	■ Replace defective component, part or module. Measure tacho pulses at pin 4 – 2 of plug X5 on the supply board (A1). Clear error message: ■ Open the lid. ■ Turn the rotor by hand. Perform a reset ➡ *Chapter 4.3 'Mains-Reset' on page 46* during rotation.

Tab. 19: Tacho error messages

Error message and description	Cause of error	Troubleshooting
LOCK ERROR 57 Analogue value at the program locking plug X27 signals that the permissible voltage range (0.9 V – 3.8 V) has been exceeded or fallen short of. ■ Operation not possible.	■ Key switch board defective ■ Cable to the key switch board defective ■ Loose contact in the routing ■ Supply board (A1) defective	■ Replace defective component, part or module. ■ Check the voltage on the supply board (A1) at plug X27, pin 1 – 2 (plug X27 plugged in). – Key switch position 1 (LOCK1): 1.4 V (± 20 mV) – Key switch position 2 (LOCK2): 2.1 V (± 20 mV) – Key switch position 3 (LOCK3): 3.3 V (± 20 mV) Clear error message: ■ Reset the mains ➡ *Chapter 4.3 'Mains-Reset' on page 46*.
IMBALANCE (03)[1] Imbalance on the motor axis ■ Rotor runs down until *'Open lid'* enable. ■ Cooling continues to the temperature setpoint. [1] Error number is not shown on the display.	■ Weight difference in the rotor mounting ■ Lifting lugs not greased ■ Incorrect IMBALANCE mode set ■ Imbalance switch (S2) not connected or defective ■ Loose contact in the line or in the plug of the imbalance switch (S2) ■ Ribbon cable to the control panel (A5) defective ■ Supply board (A1) or control panel (A5) defective	■ Replace defective component, part or module. Clear error message: ■ Open lid <u>or</u> perform reset ➡ *Chapter 4.3 'Mains-Reset' on page 46*.
ROTORCODE 10 Invalid rotor code read in during start-up. ■ Rotor runs down until *'Open lid'* enable. ■ Cooling continues to the temperature setpoint.	■ Magnetic coding on the rotor defective ■ Speed sensor system defective ■ Loose contact on the speed sensor plug ■ Incorrect direction of rotation of the rotor	■ Replace defective component, part or module. Clear error message: ■ Open lid <u>or</u> reset mains ➡ *Chapter 4.3 'Mains-Reset' on page 46*.
MAINS INTERRUPT (11)[1] Mains interruption during centrifugation ■ Rotor runs down until *'Open lid'* enable. [1] Error number is not shown on the display.	■ Power supply failed ■ Loose contact at the electrical connection ■ Ribbon cable to the control panel (A5) defective	■ Replace defective component, part or module. Clear error message: ■ Open the lid. ■ Press the *[START]* key.

Error message and description	Cause of error	Troubleshooting
VERSION-ERROR 12 Differences in the initialization of the supply board (A1), control panel (A5) and frequency converter (A2) ■ Operation not possible.	■ (Jumper assignment A.0 – A.7) on encoding strip of the supply board (A1) not correct ■ Incorrect EPROM plugged into control panel (A5) ■ Supply board (A1) defective	■ Replace defective component, part or module. ■ Correctly plug in jumpers A.0 – A.7 ➡ *Chapter 1.3 ‘ Jumper assignment’ on page 13* and reset mains ➡ *Chapter 4.3 ‘Mains-Reset’ on page 46*. ■ Plug service jumper into supply board (A1) at B.1; reset mains ➡ *Chapter 4.3 ‘Mains-Reset’ on page 46* and reinitialize the machine ➡ *Chapter 7.1.1 ‘Initializing the centrifuge’ on page 90*. Clear error message: ■ Reset the mains ➡ *Chapter 4.3 ‘Mains-Reset’ on page 46*.
INDEFINITE Unspecified error ■ Operation not possible.	■ EPROM defective ■ Control panel (A5) defective	■ Replace defective component, part or module. Clear error message: ■ Reset the mains ➡ *Chapter 4.3 ‘Mains-Reset’ on page 46*. When the error cannot be deleted, replace the EPROM or control panel (A5) ➡ *Chapter 6.10 ‘Control panel (A5)’ on page 70*.
BATT Battery voltage too low. After the error message BATT is displayed, the machine can be switched off for another 2 weeks before data is lost on the control panel (A5).	■ Battery not connected ■ Battery dead (< 2.2 V)	■ Connect battery ➡ *‘Preparing initialization’ on page 90*. Reinitialize machine ➡ *Chapter 7.1.1 ‘Initializing the centrifuge’ on page 90*. ■ Replace battery ➡ *Further information on page 73*. Reinitialize machine ➡ *Chapter 7.1.1 ‘Initializing the centrifuge’ on page 90*. After switching on the mains switch, the error message CONTROL ERROR 92 appears on the display.

Tab. 20: Other error messages

4.3 Mains-Reset

Reset the mains.

A mains reset allows a variety of different error messages to be deleted.

1. Switch off the machine via the mains switch.
2. Wait for at least 10 seconds.
3. Switch on the machine via the mains switch.

5 Maintenance

5.1 Checking for proper operating state

Electrical test in accordance with IEC 61010/DIN EN 61010 and DIN VDE0701-0702

NOTICE

Danger of material damage due to unauthorized personnel and unsuitable measuring devices!

- Only allow authorized electricians to do testing.
- Use measuring devices which meet the standard IEC 61557-16/DIN EN 61557-16. Recommendation: Electrical safety tester Fluke ESA 620 (It is imperative that the measuring device measure the leakage current downstream of measuring circuit "A.1 Measurement set-up for AC current with frequencies up to 1 MHz and for DC current" of the standard IEC 61010-1.)
- Ensure measuring conditions meet standard IEC 61010/DIN EN 61010.
- For test intervals, refer to DGUV regulations 100 – 500 or DGUV V3.

To check the correct operating state, perform test runs under the specified conditions and compare the determined actual values with the nominal values.

After a repair, a function test and electrical safety check of the device must be performed.

Measuring devices/measuring accessories:

- Stroboscope for speed measurement
- Imbalance weight 50 g (switch-off weight)
- Imbalance weight 25 g (running weight)
- Temperature measuring device, Ahlborn, type: Therm 2280-1
- Electrical safety tester, Fluke ESA 620
- Glycerine

Check the following items:

- Operating elements
- Imbalance switch-off
- Lid, gas spring, hinges
- Cooling circuit

Element	Test items
Control panel	■ Key function ■ Display, display contrast ■ Key illumination
Cable routing, plug and clamped connections	■ Check original cable routing and fastening. ■ Check original plug connections. ■ Wires must be cleanly snapped into the plug contact, and plug contact correctly snapped into the plug housing.
Assembly, screw connections	■ Check for clean and proper assembly of the components. ■ Make sure there are no foreign bodies or contamination in the device. ■ Screw heads must be intact and must not have any damage. ■ Check the screw lock at the specified connections.
Imbalance switch-off	■ For a weight difference of opposite-lying rotor places of 50 g or more, the drive must switch off during the start-up already below 750 RPM.
Lid, gas spring, hinges	■ After opening the fastening, the lid must go up on its own, release the fastening and stop. ■ Gas spring check: Lid must not fall closed in any position. Check the fastening of the gas springs. ■ Hinge check: Check the hinges and hinge bolts for completeness and perfect condition.
Fastening	■ Refer to the operating instructions for function. ■ Perform function check. ■ Perform function check of the emergency release.
Test run without cooling system	See operating instructions. Depending on the used rotor/accessories. ■ Check maximum speed with stroboscope. ■ The test is completed after reaching the maximum rotor speed.
Test run with cooling system	See operating instructions. Depending on the used rotor/accessories. ■ Check after reaching the maximum rotor speed and the lowest specified temperature. Run duration min. 1 hour. ■ Check maximum speed with stroboscope. Check the temperature of the glycerine samples using a temperature measuring device.

Tab. 21: Test items, maintenance

5.2 Maintenance table

Maintenance schedule/safety-related inspection (STK)

The maintenance plan includes that portion of the maintenance work which does not have to be done by the operating company, but must be performed by the service technicians. It includes all maintenance work not described in the operating instructions.

- The safety-related inspection (STK)/maintenance is for checking for the correct and safe operating state. The intervals must be complied with according to the maintenance table.
- The safety-related inspection (STK)/maintenance must be properly logged by the service technician (➞ *Chapter 5 ‘ Maintenance’ on page 48*).
- The prepared log about the applied measuring methods, results and other assessments must be archived until the device is completely disposed of by the operating company. These documents must be made available to the manufacturer on demand.

Interval	Subject of the maintenance work	Replacement of the parts to be maintained	Comments
At least before every use and if abnormalities are found	Lid biologically tight	After max. 10x autoclaving cycles (test and verification by operating company) and if abnormalities are found	Wear part
Weekly and if abnormalities are found	Rotor	Max. according to specified expiration date, at least when max. number of run cycles/hours of operation have been reached	Wear part
Weekly and if abnormalities are found	Buckets	Max. according to specified expiration date, at least when max. number of run cycles/hours of operation have been reached	Wear part
Annually and after every maintenance/repair/after every software update	Electrical safety test in accordance with IEC 61010/DIN EN 61010 and DIN VDE 0701-0702		It is imperative that the measuring device measure the leakage current according to measuring circuit "A.1 Measurement set-up for AC current with frequencies up to 1 MHz and for DC current" of the standard IEC 61010-1. Recommendation: Electrical safety tester, Fluke ESA 620

Interval	Subject of the maintenance work	Replacement of the parts to be maintained	Comments
Annually or after 1000 h and if any abnormalities are found	Motor	Depending on use	Wear part
Annually or after 1000 h and if any abnormalities are found	Rubber/metal bearing	Depending on use and when motor is replaced	Wear part
Annually and if any abnormalities are found	Gas pressure spring	Annually	Wear part
Annually and if any abnormalities are found	Fastening	Depending on use	Wear part
Annually and if any abnormalities are found	Seal, centrifuge chamber	Depending on use	Wear part
Annually and if any abnormalities are found	Compressor	Depending on use	Wear part
Annually and if any abnormalities are found	Motor cover, flexible seal	Depending on use	Wear part
Annually and if any abnormalities are found	Condenser	Depending on use	

Tab. 22: Maintenance table

5.3 Performing maintenance tasks

Perform maintenance tasks at the intervals specified in the maintenance table. Refer to the "Maintenance of ROTIXA 500 RS" logbook (➡ *Chapter 10.6 'Maintenance log' on page 125*) for the maintenance tasks, and log them.

5.3.1 Perform electrical safety check.

Specifications for electrical test:

The electrical safety test is to be performed at the intervals specified in the maintenance table.

NOTICE

Danger of material damage due to unauthorized personnel and unsuitable measuring devices!

- Only allow authorized electricians to do testing.
- Use measuring devices which meet the standard IEC 61557-16/DIN EN 61557-16. Recommendation: Electrical safety tester Fluke ESA 620 (It is imperative that the measuring device measure the leakage current downstream of measuring circuit "A.1 Measurement set-up for AC current with frequencies up to 1 MHz and for DC current" of the standard IEC 61010-1.)
- Ensure measuring conditions meet standard IEC 61010/DIN EN 61010.
- For test intervals, refer to DGUV regulations 100 – 500 or DGUV V3.

6 Repair

Electrostatic discharge

WARNING

Risk of injury and material damage due to electrostatic discharge!

High potential differences can result in electrical breakdowns and can discharge as short, high electric current. Here, there is a danger of igniting flammable materials, the risk to personnel of electric shock and risk of damaging electrical components.

- Before touching any electronic components, always discharge any electric charge on your body.

Residual voltage

WARNING

Risk of injury due to residual voltage!

Capacitors still retain a gradually dropping residual voltage, even after the power is switched off. Uncontrolled discharge can occur if there is direct contact. This can result in injuries and material damage to the electronics.

- After switching off the power, wait for another 180 seconds before touching electronic parts.

Proper wiring

NOTICE

Always maintain proper wiring.

The following applies to all dismounting and mounting work on the centrifuge: When working on cables and lines, document the exact positioning. This includes the routing, the type and position of the fixation, as well as the arrangement, e.g. in loops. Be sure to restore the delivery condition.

1. Switch off the device and remove from the network.
2. Make repairs.
3. Wire and mount the device again properly.
4. Perform a function check (➞ *Chapter 6.26 'Performing function check after repair' on page 88*).

6.1 Side panels

Dismounting side panels

1. Switch off the device and remove from the network.
2. Loosen the 3 internal hexalobular screws (T15) at the top of the side panel and remove.

3. ⚠ WARNING

Risk of getting caught by falling side panel!

Grab the side panel from the bottom and secure it against falling down. Loosen the 3 internal hexalobular screws (T15) at the bottom of the side panel and remove.

4. NOTICE

Danger of pulling off the protective conductor cable!

Tilt the side panel forward and lift it out and upward carefully such that the protective conductor connection is not pulled off (*Fig. 7*).

Fig. 7: Lifting out the side panel

5. Disconnect the protective conductor (*Fig. 8*).
6. Remove the side panel, put it to the side and secure it against falling over.

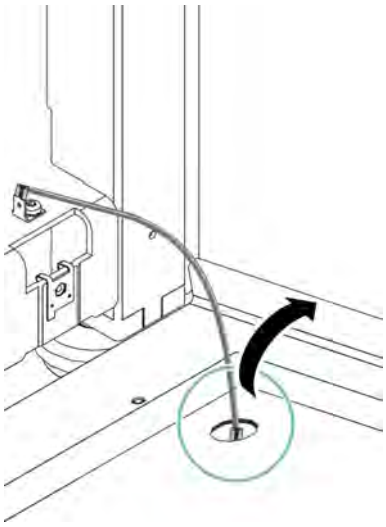

Fig. 8: Disconnect the protective conductor.

Mounting side panels

1. Place side panel on the housing with bottom side slightly tilted.
2. Connect the protective conductor.
3. Press the side panel onto the housing and hold in position.
4. Insert all internal hexalobular screws (T15) again and firmly tighten.

6.2 Rear wall

Dismounting the rear panel

1. Switch off the device and remove from the network.

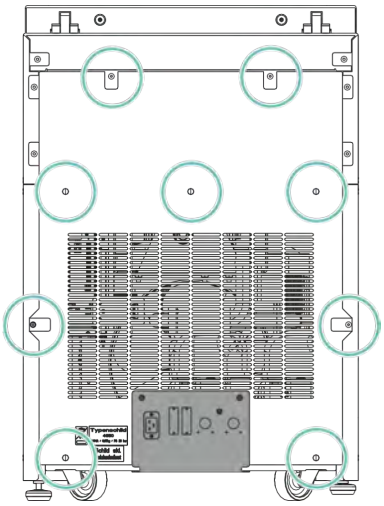

Fig. 9: Screw positions, rear panel

2. Loosen the 9 internal hexalobular screws (T15) on the rear panel and remove (*Fig. 9*).

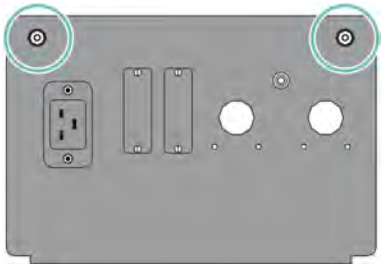

Fig. 10: Screw positions, protective plate

3. Loosen the 2 internal hexalobular screws (T15) on the protective plate and remove (*Fig. 10*).

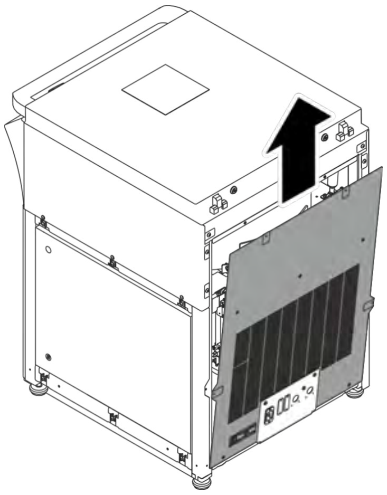

Fig. 11: Lifting out the rear panel

4.

NOTICE

Danger of pulling off the protective conductor cable!

Tilt the rear panel slightly forward and carefully lift it out and upward past the protective plate (*Fig. 11*). Here, make sure that the protective conductor connection is not pulled off.

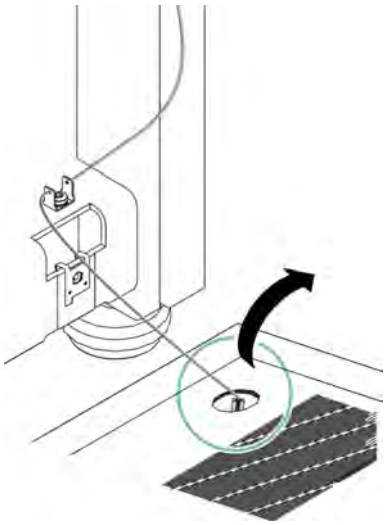

Fig. 12: Disconnect the protective conductor.

5. Disconnect the protective conductor (*Fig. 12*).
6. Remove the rear panel, put it to the side and secure it against falling over.

Mounting the rear panel

1. Connect the protective conductor.
2. Guide the rear panel behind the protective plate from above, press on the housing and hold in position.
3. Insert all screws in the rear panel and protective plate again and firmly tighten.

6.3 Front panel

Dismounting the front panel

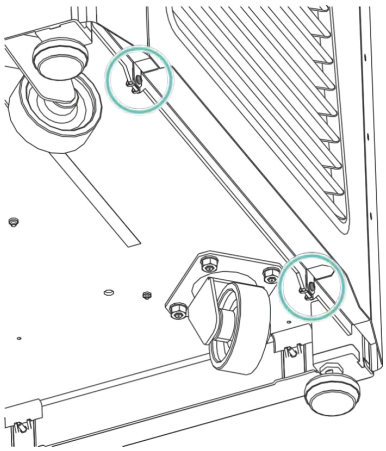

Fig. 13: Screws on the lower front panel

1. Switch off the device and remove from the network.
2.

CAUTION

Danger of getting caught on the loose front panel!

Hold the front panel in position and loosen the 2 internal hexalobular screws (T15) at the bottom edge of the front panel and remove (*Fig. 13*).

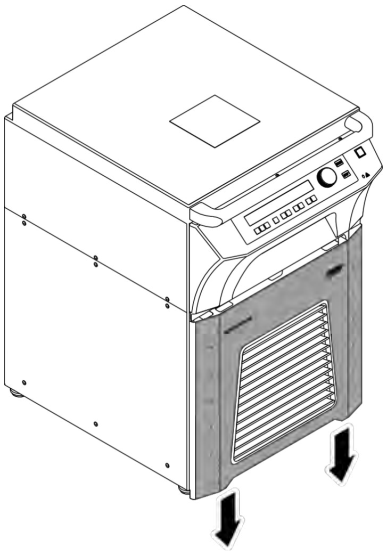

Fig. 14: Pushing the front panel downward

3. Carefully push the front panel downward by approx. 5 cm (*Fig. 14*).
4.

> **NOTICE**
>
> Danger of pulling off the protective conductor cable!

Tilt the front panel forward and lift out carefully such that the protective conductor connection is not pulled off.

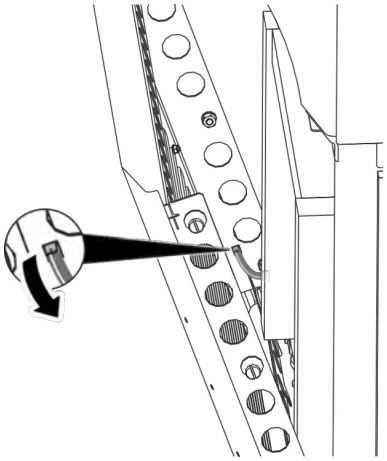

Fig. 15: Disconnect the protective conductor.

5. Disconnect the protective conductor (*Fig. 15*).
6. Remove the front panel, put it to the side and secure it against falling over.

Mounting the front panel

1. Connect the protective conductor.
2. Position the front panel approx. 5 cm below the front faceplate on the device and press it on.
3. Push the front panel upward inside the guide by approx. 5 cm.
4. Insert the internal hexalobular screws (T15) again and firmly tighten.

6.4 Front panel

Dismounting the front panel

1. Open the lid.
2. Switch off the device and remove from the network.
3. Dismount the front panel (➞ *'Dismounting the front panel' on page 56*).

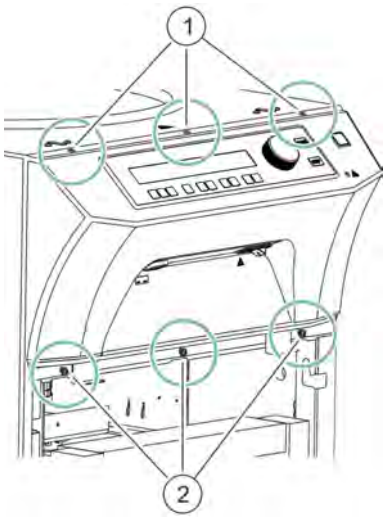

Fig. 16: Loosening screws on the front faceplate

4. Screw the 3 internal hexalobular screws (T15) out of the bottom side of the front faceplate (*Fig. 16*/2).
5. Screw the 3 Allen screws (H3) out of the top side of the front faceplate (*Fig. 16*/1).

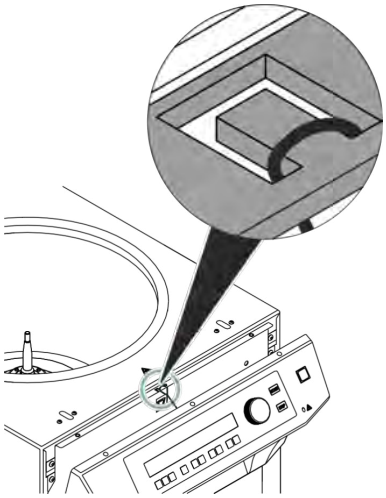

Fig. 17: Fastening the securing cord

6. Tilt the front faceplate slight forward, apply with the bottom edge on the covering edge, and secure it against falling out with the securing cord (*Fig. 17*).

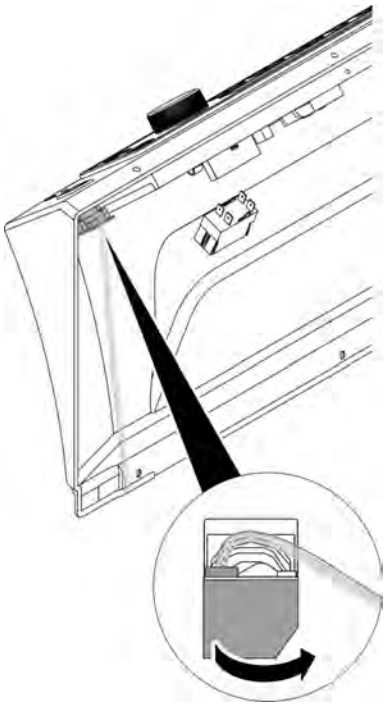

Fig. 18: Lid button

7. Turn the contact block board of the lid button counter-clockwise by 45° and remove (*Fig. 18*).
8. Put the key switch in the middle position.

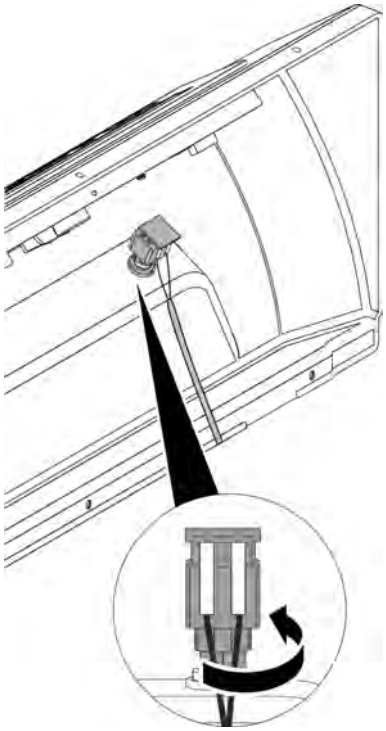

Fig. 19: Key switch

9. Turn the contact sensor of the key switch counter-clockwise by 45° and remove (*Fig. 19*).

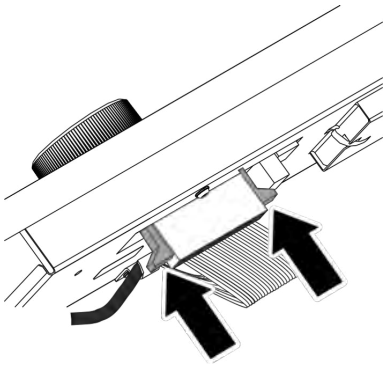

Fig. 20: Disconnecting the ribbon cable plug

10. Evenly push the levers from the ribbon cable plug outward on both sides and disconnect the plug (*Fig. 20*).

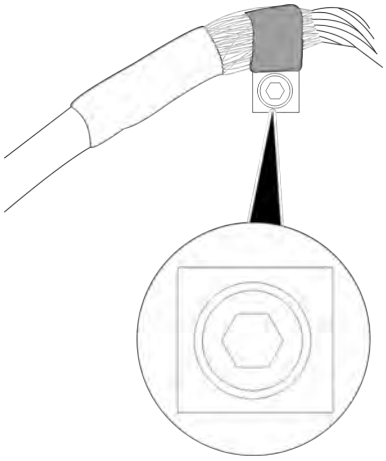

Fig. 21: Loosening the ground screw

11. Loosen the internal hexalobular screw (T15) of the ground (*Fig. 21*).
12. Carefully disconnect the cable from the terminal and remove the ribbon cable plug.

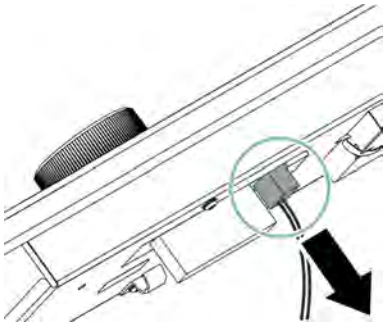

Fig. 22: Temperature sensor plug

13. Carefully disconnect the plug of the temperature sensor (*Fig. 22*).

Fig. 23: Mains switch plug

14. Disconnect the 4 individual plugs from the mains switch (F2) (*Fig. 23*).
15. Hold onto the front faceplate, remove the securing cord and put the front faceplate to the side.

Mounting the front panel

1. Place the front faceplate with the bottom edge on the covering edge and mount the securing cord.
2. Plug the 4 individual plugs into the mains switch (F2) (➡ *Chapter 10.2 'Connection plan' on page 114*).
3. Plug in the plugs of the temperature sensor (*Fig. 22*).
4. Connect the cable of the ribbon cable plug to the ground using the internal hexalobular screw (T15) (*Fig. 21*) and carefully insert the ribbon cable plug.
5. Insert the contact sensor of the key switch and turn clockwise by 45°.
6. Insert the contact block board of the lid button and turn clockwise by 45°.
7. Put the front panel onto the centrifuge and insert the 3 internal hexalobular screws (T15) in the bottom side of the front faceplate (*Fig. 16*/2) and tighten lightly.
8. Insert the 3 Allen screws (H3) in the top side of the front faceplate (*Fig. 16*/1) and then firmly tighten all 6 screws.
9. Mount the front panel (➡ *Chapter 6.3 'Front panel' on page 56*).

6.5 Motor

Dismounting the motor

1. Open the lid.
2. Switch off the device and remove from the network.
3. Dismount the left side panel (➡ *Chapter 6.1 'Side panels' on page 53*).
4. Dismount the rear panel (➡ *Chapter 6.2 'Rear wall' on page 54*).

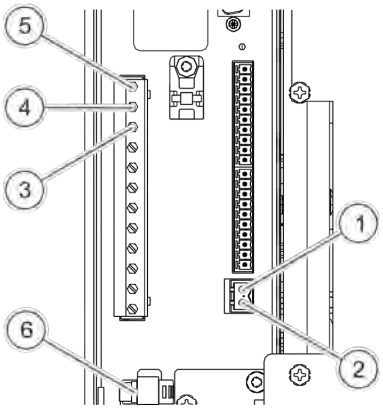

Fig. 24: Terminals, frequency converter

5. Disconnect the terminals U (*Fig. 24*/5), V (*Fig. 24*/4) and W (*Fig. 24*/3) from plug connector X1 as well as the two white cables in 0- (*Fig. 24*/1) and 0+ (*Fig. 24*/2) on plug connector X3 from the frequency converter (A2).
6. Loosen the hose clamp (*Fig. 24*/6).
7. Disconnect the cable from the terminal strip.
8. Stick the Allen key on the rotor hub shaft and turn counter-clockwise until no more turning resistance is noticeable.

   ➡ The rotor is released from the drive shaft.
9. Lift the rotor out of the centrifuge and store it safely.

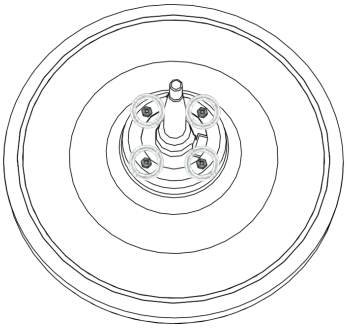

Fig. 25: Screws of the motor cover

10. Loosen the 4 Phillips screws on the motor cover (*Fig. 25*).

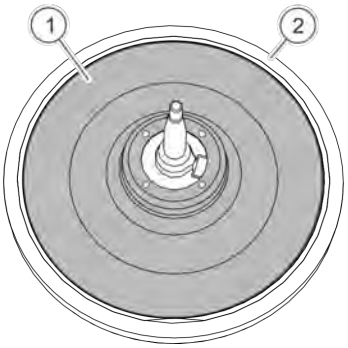

Fig. 26: Removing the motor cover

11. Disconnect the motor cover (*Fig. 26*/1) from the rubber sleeve (*Fig. 26*/2) by pulling, and put it to the side.

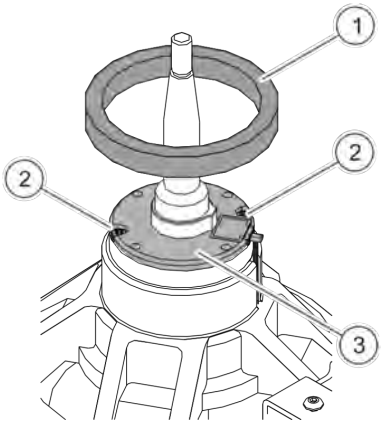

Fig. 27: Top side of motor

12. Pull the ring seal (*Fig. 27*/1) off of the bearing shield, and put it to the side.
13. Remove the 2 Phillips screws from the speed sensor (*Fig. 27*/2).
14. Remove the cable of the speed sensor out of the groove, and put the speed sensor to the side (*Fig. 27*/3).

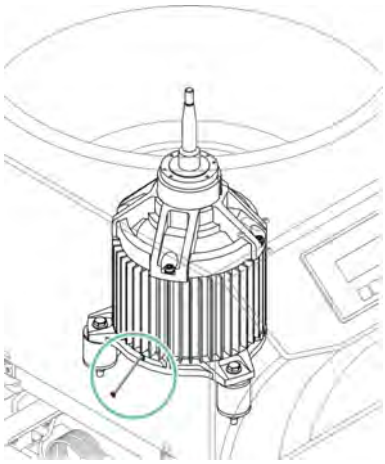

Fig. 28: Disconnecting the ground cable

15. Disconnect the ground cable (*Fig. 28*).
16. Turn back the imbalance switch (*Fig. 30*).

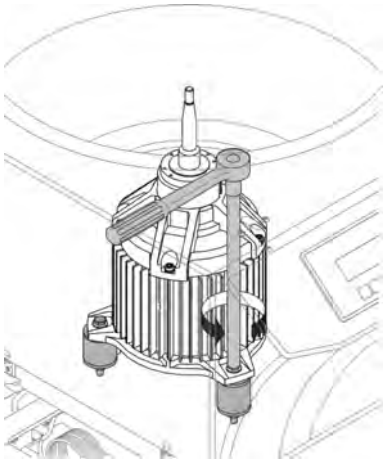

Fig. 29: Screwing off the motor

17. Loosen the 3 hexagon head screws (size 13) on the rubber/metal bearings of the motor with a ratchet wrench and extension (*Fig. 29*).

> *If the rubber/metal bearing should also be removed, loosen the 3 hexagon head screws (size 13) from below with a ratchet wrench and, after removing the motor, screw off the rubber/metal bearings including the anti-twist device from the motor.*

18. Lift the motor out of the centrifuge.

Mounting the motor

1. Lift the motor into the centrifuge.
2. Stick the motor cable through and firmly tighten the hexagon head screws (size 13) on the rubber/metal bearings of the motor from above with a ratchet wrench and extension.

> *If the rubber/metal bearings were removed, screw these back on from below with the 3 hexagon head screws (size 13, 15 – 20 Nm).*

3. Attach the ground cable to the motor (*Fig. 28*).
4. Place the speed sensor (*Fig. 27*/3) on the bearing shield.
5. Insert 2 Phillips screws on the speed sensor and tighten (*Fig. 27*/2).
6. Route the speed sensor cable in the groove provided for it on the motor (*Fig. 37*).
7. Place ring seal (*Fig. 27*/1) on the bearing shield and press firmly.
8. Insert motor cover (*Fig. 26*/1) and carefully press it into the groove of the rubber sleeve.
9. Insert Phillips screws on the motor cover and firmly tighten (*Fig. 25*).
10. Connect the ground cable (*Fig. 28*).

11. Correctly plug contacts into the terminal strip of the frequency converters (A2) according to the circuit diagram (➡ *Chapter 10.2 'Connection plan' on page 114*).

12. Attach motor cable with hose clamp to the frame so it is resistant to tension.

13. NOTICE

    Danger of material damage to the rotor and drive shaft!

    Place the rotor carefully on the drive shaft.

14. Stick the Allen key on the rotor hub shaft and carefully tighten the rotor hand-tightly.

Adjusting the imbalance switch

For a weight difference of opposite-lying rotor places of 50 g or more, the drive must switch off during the start-up already below 750 RPM. The imbalance switch-off is located on the rear side of the centrifuge on the motor.

15. Loosen the lock nut (*Fig. 30*).

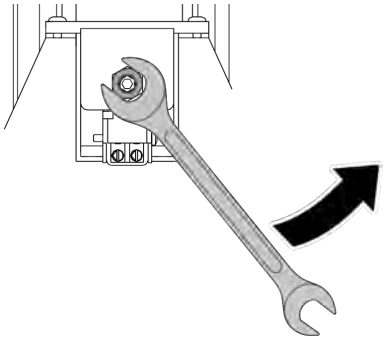

Fig. 30: Lock nut, imbalance switch

16. Stick the Allen key in the insert screw (*Fig. 31*):
    - Turning clockwise reduces the permissible imbalance.
    - Turning counter-clockwise increases the permissible imbalance.
17. Firmly tighten the lock nut again.
18. Perform test run with the switch-off weight. Repeat the adjustment until the imbalance switch-off switches in the permissible range.
19. Check the adjustment with a running weight.

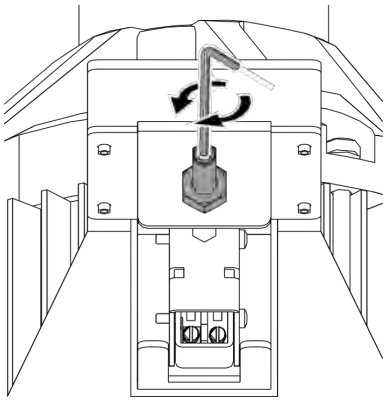

Fig. 31: Adjusting the imbalance switch

6.6 Replace the drive pin on the motor shaft

WARNING

Danger to life due to electric shock.

Touching live parts or cables can result in death or serious injury due to electric shock.

- Before installing or removing components, switch off the power at the mains and disconnect the centrifuge from the mains.
- Do not touch live parts or cables.

NOTICE

Always maintain proper wiring.

The following applies to all disassembly and assembly work on the centrifuge: Document the exact positioning when working on cables and conductors. This includes the course, type and position of the fixing, as well as the arrangement in loops, for example. It is essential to restore the device to the condition it was in when it was delivered.

1. Open the lid.
2. Dismount the rotor.
3.

NOTICE

Damage to the motor due to unsuitable tools and blows to the wrong components

The motor or the motor shaft may be damaged if a metal hammer is used or if the motor shaft is struck from above or from the side.

- Use a rubber mallet.
- Only strike the driver.
- Do not strike the motor shaft from above or from the side.

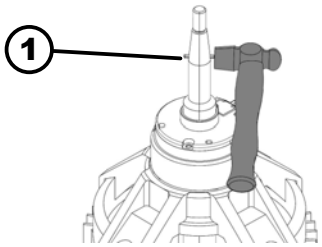

Fig. 32: driver pin (illustration exemplary)

• Use a rubber mallet and a suitable tool to push the driver pin (1) out of the motor shaft and remove it.

Use a second rubber mallet to counterhold the upper end of the motor shaft.

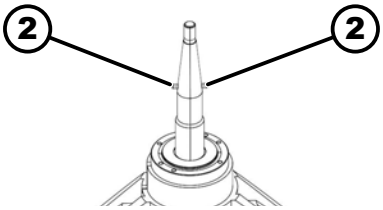

Fig. 33: Position drive pin symmetrically (illustration exemplary)

4. NOTICE

Damage to the motor due to unsuitable tools and blows to the wrong components

The motor the motor shaft or the drive pin may be damaged if a metal hammer is used or if the motor shaft is struck from above or from the side.

- Use a rubber mallet.
- Only strike the driver
- Do not strike the motor shaft from above or from the side.

NOTICE

Damage to the device due to asymmetrical positioning of the driver pin in the motor shaft

A driver pin that protrudes too far can cause damage to the rotor cone.

Press the new carrier pin (1) into the motor shaft with a rubber mallet.

Use a second rubber mallet to counterhold the upper end of the motor shaft.

Position the pin symmetrically (2). An equal overhang to the motor shaft must protrude on both sides.

5. The components are installed in the reverse order.

6.7 Speed sensor

Dismounting the speed sensor

1. Open the lid.
2. Switch off the device and remove from the network.
3. Dismount the right side panel (➞ *Chapter 6.1 'Side panels' on page 53*).
4. Unplug the plug X5 from the supply board (A1) (➞ *Chapter 6.8 'Supply board (A1)' on page 68*).
5. Remove the cable ties from the speed sensor cable and dispose of them.
6. NOTICE

Danger of material damage to the rotor and drive shaft!

Stick the Allen key on the rotor hub shaft and loosen carefully.

7. Lift the rotor out of the centrifuge and store it safely.
8. Loosen the 4 Phillips screws on the motor cover (*Fig. 25*).

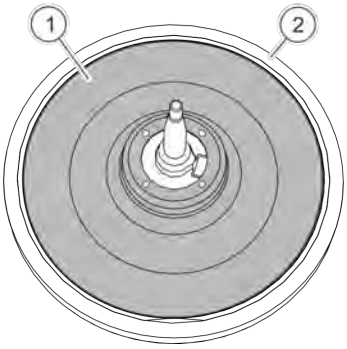

Fig. 34: Motor cover and rubber sleeve

9. Remove the motor cover (*Fig. 34*/1) from the rubber sleeve (*Fig. 34*/2), and put it to the side.

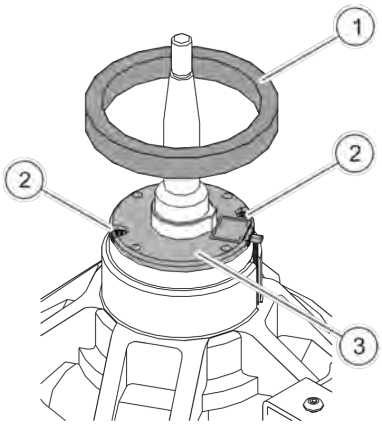

Fig. 35: Top side of motor

10. Pull the ring seal off of the bearing shield and put it to the side (*Fig. 35*/1).
11. Remove the 2 Phillips screws from the speed sensor (*Fig. 35*/2).
12. Remove the speed sensor (*Fig. 35*/3).

Mounting the speed sensor

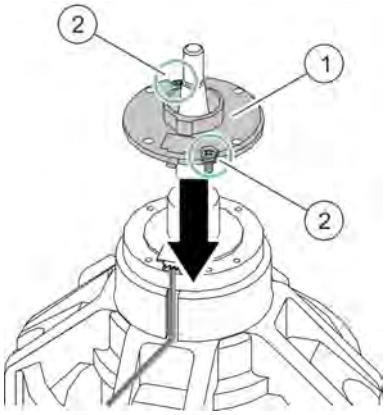

Fig. 36: Mounting the speed sensor

1. Insert the speed sensor (*Fig. 36*/1).
2. Insert Phillips screws in the speed sensor and firmly tighten (*Fig. 36*/2).

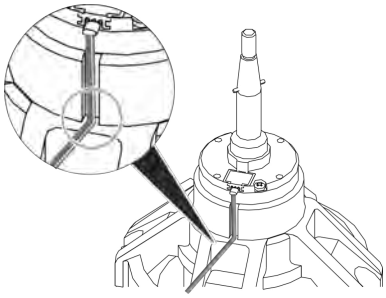

Fig. 37: Routing the cable of the speed sensor

3. Route the speed sensor cable in the groove provided for it (*Fig. 37*).

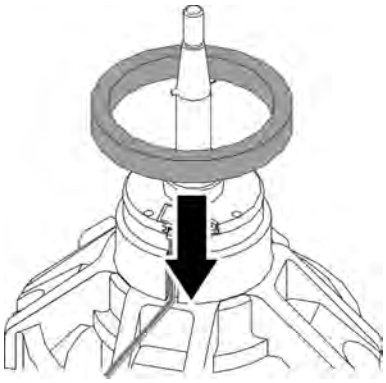

Fig. 38: Placing the ring seal on the bearing shield

4. Place the ring seal on the bearing shield (*Fig. 38*).
5. Insert the motor cover and work it into the groove of the rubber sleeve.
6. Insert Phillips screws on the motor cover and firmly tighten.
7. Place the rotor carefully on the drive shaft.
8.

> **NOTICE**
>
> **Danger of material damage to the rotor and drive shaft!**

Stick the Allen key on the rotor hub shaft and carefully tighten hand-tightly.

9. Establish all plug connections on the supply board (A1) (➞ *Chapter 10.2 'Connection plan' on page 114*).
10. Fasten the speed sensor cable with cable ties again.
11. Mount the right side panel (➞ *'Mounting side panels' on page 54*).

6.8 Supply board (A1)

Dismounting the supply board (A1)

1. Open the lid.
2. Switch off the device and remove from the network.
3. Dismount the right side panel (➞ *Chapter 6.1 'Side panels' on page 53*).
4. Disconnect all plugs from the supply board (A1) (➞ *Chapter 10.2 'Connection plan' on page 114*).
5. Loosen the 7 hex nuts (M5) on the supply board (A1) and remove (*Fig. 39*).
6. Remove the supply board (A1).

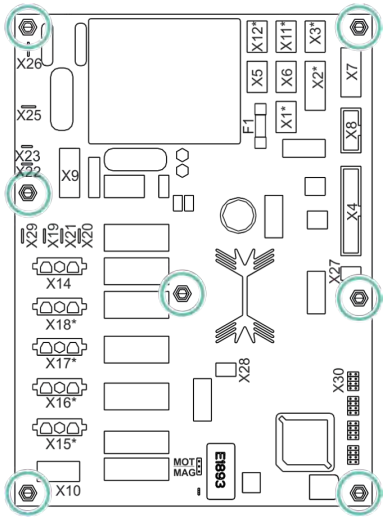

Fig. 39: Supply board

Mounting the supply board (A1)

1. Insert new supply board (A1).
2. Insert the fastening screws of the supply board (A1) and firmly tighten (*Fig. 39*).
3. Establish plug connections on the supply board (A1) (➞ *Chapter 10.2 'Connection plan' on page 114*).
4. Set imbalance mode and jumper on the control panel (A5) (➞ *Chapter 7.1.1 'Initializing the centrifuge' on page 90*).

5. Set the date and time (➡ *Further information on page 90*).
6. Mount the right side panel (➡ *'Mounting side panels' on page 54*).

6.9 Frequency converter (A2)

WARNING

Risk of injury due to residual voltage!

After disconnecting the centrifuge from the mains or after switching off the mains switch, the intermediate circuit capacitors of the frequency converter (A2) are still charged. If they are touched, this can result in dangerous discharge and injuries.

- Wait for at least 180 seconds until the intermediate circuit capacitors of the frequency converter (A2) have discharged.

Dismounting the frequency converter (A2)

1. Switch off the device and remove from the network.
2. Dismount the right side panel (➡ *Chapter 6.1 'Side panels' on page 53*) and rear panel (➡ *'Dismounting the rear panel' on page 54*).
3. Disconnect all occupied terminals on the frequency converter (A2) and supply board (A1).
4. Disconnect the cable from the terminal strip.
5. WARNING

   Risk of injury due to component falling out!

   Firmly hold the support plate and loosen the 4 screws (HW4) and remove (*Fig. 40*/1).

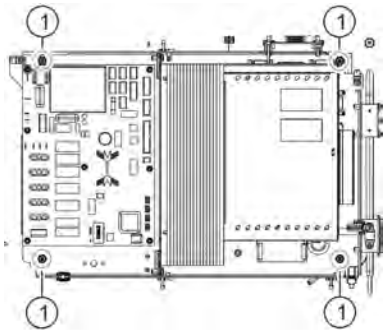

Fig. 40: Screws of the support plate

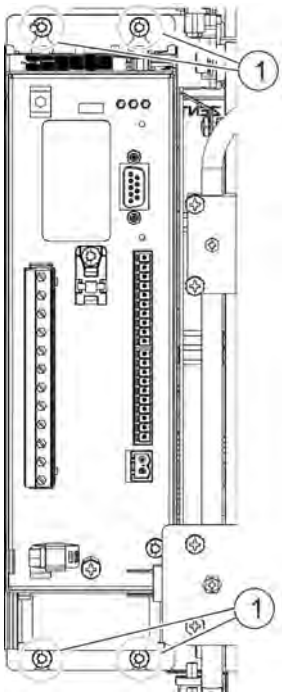

Fig. 41: Screw connections of the frequency converter

6. Loosen the 4 screws (T20) and remove (*Fig. 41*/1).
7. Lift the frequency converter (A2) out of the housing.

Mounting the frequency converter (A2)

1. Insert the frequency converter (A2) into the housing.
2. Insert 4 screws (T20) of the frequency converters (A2) into the support plate and firmly tighten (*Fig. 41*/1).
3. Position the support plate with frequency converter (A2) on the device and insert 4 screws (HW4) and firmly tighten (*Fig. 40*/1).
4. Establish cable connection to the frequency converter (A2) and to the supply board (A1) (➞ *Chapter 10.2 'Connection plan' on page 114*).
5. Perform initialization (➞ *'Initializing the frequency converter (A2)' on page 93*).
6. Mount the right side panel (➞ *Chapter 6.1 'Side panels' on page 53*) and rear panel (➞ *'Mounting the rear panel' on page 56*).

6.10 Control panel (A5)

Dismounting the control panel (A5)

1. Switch off the device and remove from the network.
2. Dismount the front faceplate, disconnect the ground and all cable connections from the control panel (➞ *Chapter 6.4 'Front panel' on page 57*).
3. Loosen the 4 internal hexalobular screws (T15) on the housing cover (*Fig. 42*) and remove.

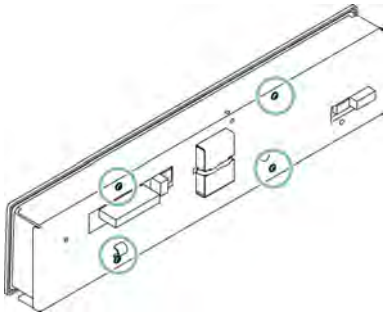

Fig. 42: Loosening screws on the control panel

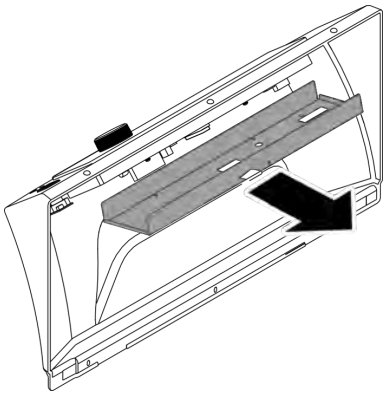

Fig. 43: Removing the housing cover

4. Remove the housing cover (*Fig. 43*).

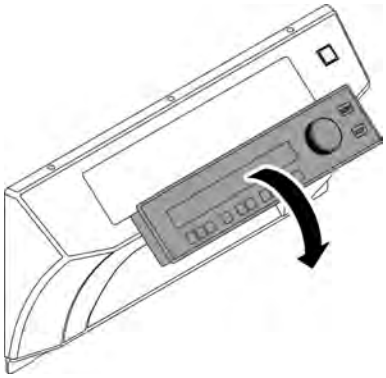

Fig. 44: Removing the control panel

5. Remove the control panel (A5) from the front side of the front faceplate (*Fig. 44*).

Mounting the control panel (A5)

1. Insert the control panel (A5) into the front faceplate from the front.
2. Put on housing cover and position.
3. Insert 4 internal hexalobular screws (T15) and firmly tighten (*Fig. 42*).
4. Insert the grounding strap of the ribbon cable to the rotary knob into the terminal and tighten the internal hexalobular screw (T15) hand-tightly.
5. Plug the ribbon cable of the rotary knob, the plug of the temperature sensor and contact sensor of the key switch into the control panel.
6. Mount the front faceplate (➞ *Chapter 6.4 'Front panel' on page 57*).
7. Perform initialization (➞ *Chapter 7.1.1 'Initializing the centrifuge' on page 90*).

6.11 EPROM on control panel (A5)

NOTICE

Danger of material damage to the EPROM due to electrostatic discharge!

As a result of electrostatic discharge on the EPROM, its function will be restricted, possibly even to the degree that it does not function at all.

Wear a ground bracelet during all work on the EPROM.

Dismounting the EPROM

Protective equipment:

- Grounding bracelet

Tool:

- IC pliers

1. Switch off the device and remove from the network.
2. Dismount the front faceplate (➡ *Chapter 6.4 'Front panel' on page 57*).
3. Carefully release the EPROM spring using a screwdriver (*Fig. 45*).
4. CAUTION

   Sharp edges on sheet metal parts!

   Carefully remove the EPROM spring and EPROM cover.

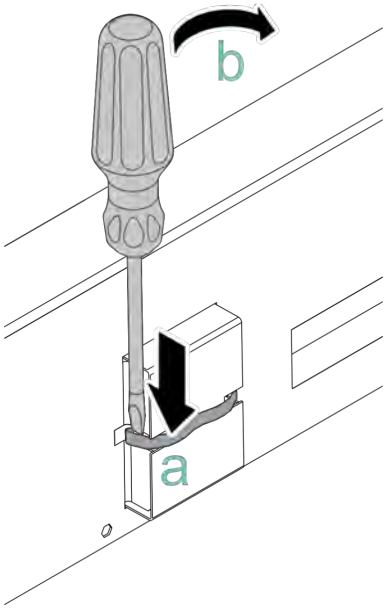

Fig. 45: Releasing the EPROM spring

5. Carefully lift the EPROM out of the IC socket using the IC pliers (*Fig. 46*).

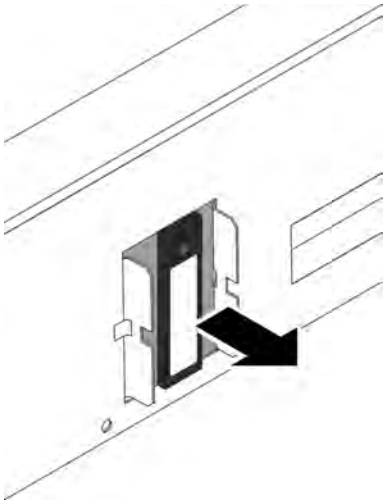

Fig. 46: EPROM

Mounting the EPROM

Protective equipment:

- Grounding bracelet

Correct installation of the EPROM

When installing the EPROM, note that the notch of the IC socket and the notch of the EPROM housing are located on the same side.

1. Carefully press the EPROM into the IC socket such that PIN 1 of the EPROM lies at the notch of the IC socket.
2. CAUTION

   Sharp edges on sheet metal parts!

   Carefully put on the EPROM cover.
3. Attach the EPROM spring first on one side, then the opposite side and press down until it engages (*Fig. 47*).
4. Mount the front faceplate (➡ *Chapter 6.4 'Front panel' on page 57*).
5. Perform initialization (➡ *Chapter 7.1.1 'Initializing the centrifuge' on page 90*).

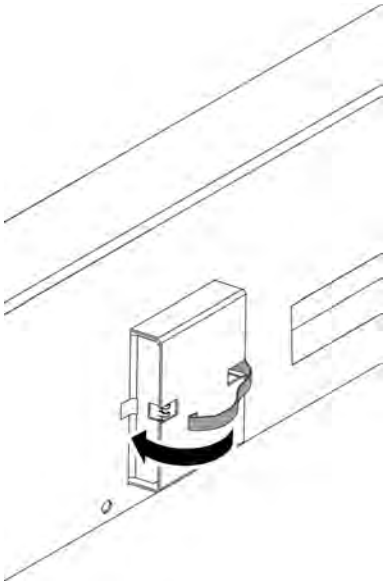

Fig. 47: Attaching the EPROM spring

6.12 Battery

NOTICE

Danger of data loss!

Capacitors on the control panel (A5) supply the RAM with voltage for approx. 40 min after disconnecting the power connection. After this time, saved data will be lost.

- Only interrupt the power connection for a short time.

Replacing the battery

1. Switch off the device and remove from the network.
2. Dismount the front faceplate (➡ *Chapter 6.4 'Front panel' on page 57*).
3. Loosen the 4 screws on the housing cover of the control panels (A5) and remove (➡ *'Dismounting the control panel (A5)' on page 70*).
4. Dismount the housing cover (*Fig. 43*).
5. Remove the control panel (A5) from the front faceplate from the front (*Fig. 44*).

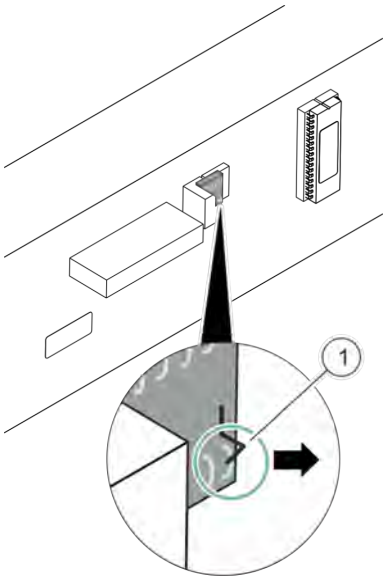

Fig. 48: Opening the contact

6. Open contact 1 on the DIP switch (*Fig. 48*/1).

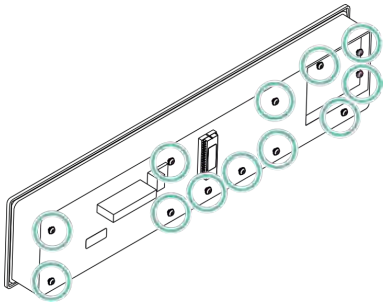

Fig. 49: Loosening the screws of the control panel board

7. Unscrew the 12 internal hexalobular screws (T1) of the control panel board and lift up the board carefully (*Fig. 49*).
8. Desolder the battery and dispose of it according to manufacturer specifications.
9. Solder in a new battery with the correct polarization.
10. Carefully insert the board and insert all internal hexalobular screws (T1) of the control panel board (*Fig. 49*) and firmly tighten.
11. Insert the control panel (A5) into the front faceplate from the front (*Fig. 44*).
12. Mount the housing cover (*Fig. 43*).
13. Insert screws on the housing cover of the control panel (A5) and firmly tighten (➞ *'Dismounting the control panel (A5)' on page 70*).
14. Mount the front faceplate (➞ *Chapter 6.4 'Front panel' on page 57*).

6.13 Overvoltage protection

Dismounting the overvoltage protection

1. Switch off the device and remove from the network.
2. Dismount the rear panel (➞ *Chapter 6.2 'Rear wall' on page 54*).

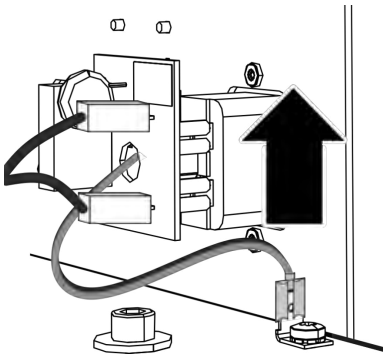

Fig. 50: Disconnecting the ground cable

3. Disconnect the ground cable of the overvoltage protection (*Fig. 50*).

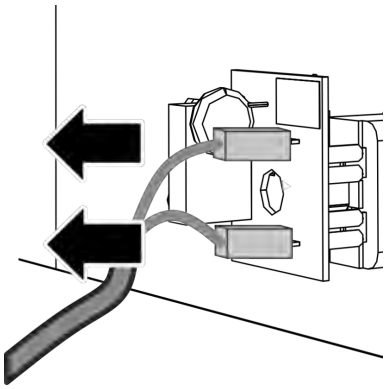

Fig. 51: Terminal strips, overvoltage protection

4. Disconnect the mains cable from the overvoltage protection board at terminal strips X1 and X2 (*Fig. 51*).

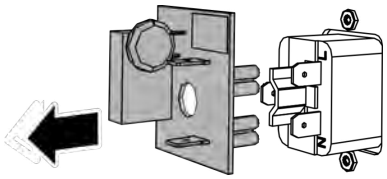

Fig. 52: Disconnecting the overvoltage protection board

5. Disconnect the overvoltage protection board from the terminal strips on the plug socket of the power supply and put it to the side.

Mounting overvoltage protection

1. Connect a new overvoltage protection board to the terminal strips on the plug socket of the power supply.
2. Plug the mains cable into the terminal strips X1 and X2 () of the overvoltage protection board.
3. Route the ground cable through the hole of the overvoltage protection board and plug in the plug socket of the mains plug (*Fig. 50*).
4. Mount the rear panel (➞ *'Mounting the rear panel' on page 56*).

6.14 Unbalance switch

Dismounting the imbalance switch

1. Switch off the device and remove from the network.
2. Dismount the rear panel (➞ *Chapter 6.2 'Rear wall' on page 54*).
3. Disconnect the plug X6 from the supply board (A1) ().
4. Loosen the lock nut (*Fig. 30*).
5. Stick the Allen key in the adjusting screw (*Fig. 31*).
6. Screw out the adjusting screw and remove.
7. Remove cable ties.

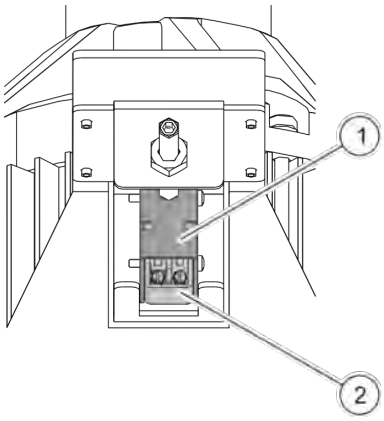

Fig. 53: Unbalance switch

8. Pull the imbalance switch (*Fig. 53*/2) out of the holder (*Fig. 53*/1).

Mounting the imbalance switch

1. Stick the imbalance switch in the holder.
2. Mount cable ties.
3. Stick the Allen key into the adjusting screw and screw in the adjusting screw (*Fig. 31*).
4. Firmly tighten the lock nut (*Fig. 30*).
5. Readjust the imbalance switch-off (➞ *'Mounting the motor' on page 63*).
6. Connect the plug X6 to the supply board (A1) ().
7. Mount the rear panel (➞ *'Mounting the rear panel' on page 56*).

6.15 Lid lock

Dismounting the lid lock

1. Switch off the device and remove from the network.
2. Dismount the front faceplate (➞ *Chapter 6.4 'Front panel' on page 57*).
3. Loosen the 7 internal hexalobular screws (T15) (*Fig. 54*) and remove the dark-grey protective plate (*Fig. 54*/1) behind the front faceplate.

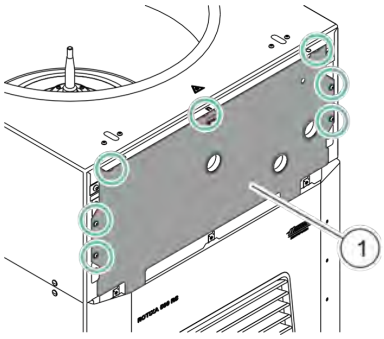

Fig. 54: Protective plate

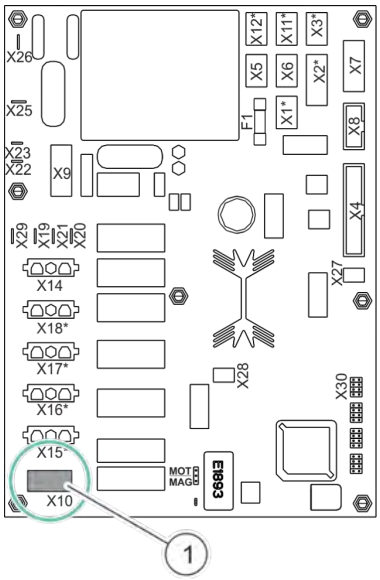

Fig. 55: Plug X10

4. Pull the plug of the lid lock X10 (*Fig. 55*/1) out of the supply board (A1) ().

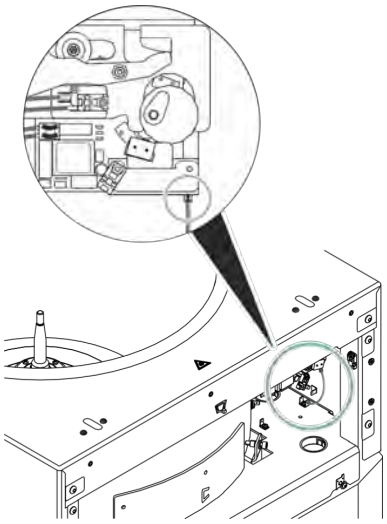

Fig. 56: Disconnect the protective conductor.

5. Disconnect the protective conductor connection from the lid lock (*Fig. 56*).

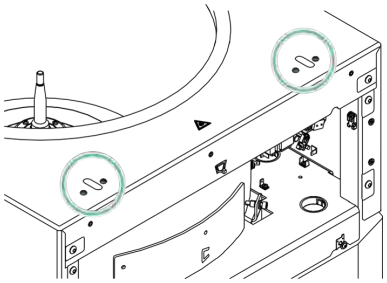

Fig. 57: Lid lock screws

6.

WARNING

Risk of injury due to component falling out!

Hold onto the lid lock and screw the two screws of the left and right lid lock out of the housing and remove (*Fig. 57*).

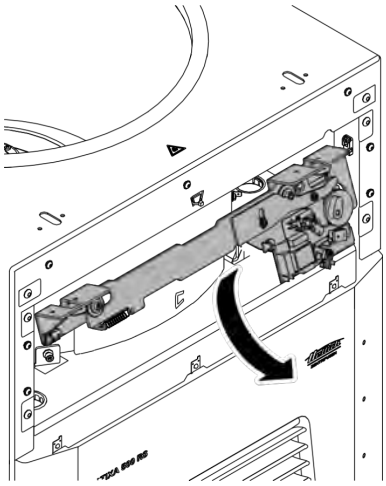

Fig. 58: Removing the lid lock

7. Remove the lid lock (*Fig. 58*).

Mounting the lid lock

1. Insert the lid lock and hold onto it.
2. Screw the lid lock onto the housing at the left and right, each with 2 screws (*Fig. 57*).
3. Plug the protective conductor connection into the lid lock (*Fig. 56*).
4. Plug the plug of the lid lock X10 into the supply board (A1) (*Fig. 55*/1).
5. Mount the dark-grey protective plate behind the front faceplate.
6. Mount the front panel (➞ *Further information on page 56*) and front faceplate (➞ *Further information on page 61*).

6.16 Temperature sensors

Dismounting the temperature sensor T1 (up in the lid seal)

Before removing the temperature sensor, note how far the temperature sensor projects from the seal. Install the new temperature sensor the same way (Fig. 59).

1. Switch off the device and remove from the network.
2. Dismount the front faceplate (➞ *Chapter 6.4 'Front panel' on page 57*).
3. Dismount the front panel (➞ *Chapter 6.3 'Front panel' on page 56*).
4. Unplug plug X2 from the control panel (A5).
5. Dismount the lid lock (➞ *Further information on page 61*).

NOTICE

Danger of material damage to the seal due to pulling out the temperature sensor!

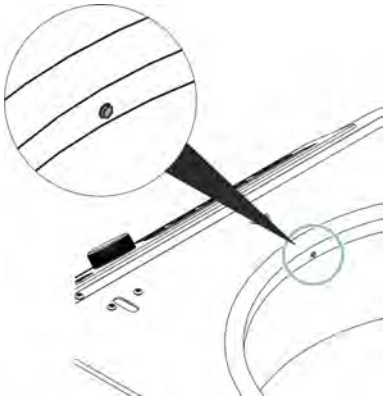

Fig. 59: Temperature sensor T1

6. Carefully pull the temperature sensor out toward the rear.
7. Remove the residues of the silicone sealing compound from the bore.

Mounting temperature sensor T1 (up in the lid seal)

1. Insert temperature sensor with silicone sealing compound into the bore of the seal from the rear.
2. Mount the lid lock (➞ *'Mounting the lid lock' on page 78*).
3. Plug the plug X2 into the control panel (A5).
4. Mount the front panel (➞ *'Mounting the front panel' on page 57*).
5. Mount the front faceplate (➞ *Chapter 6.4 'Front panel' on page 57*).

Dismounting temperature sensor T2 (down in the centrifuge chamber)

Before removing the temperature sensor, note its orientation (Fig. 60).

1. Switch off the device and remove from the network.
2. Dismount the right side panel (➞ *'Dismounting side panels' on page 53*).
3. Unplug plug X2 from the supply board (A1).

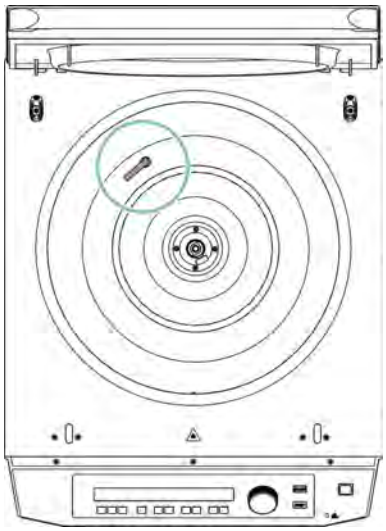

Fig. 60: Temperature sensor T2

4. Remove the cable fastenings from the cable of temperature sensor T2.
5. Disconnect the plug of temperature sensor T2.
6. Pull the temperature sensor upward in the centrifuge chamber.

Mounting temperature sensor T2 (down in the centrifuge chamber)

1. Pull the cable of the new temperature sensor through the bore in the centrifuge chamber.
2. Press the temperature sensor into the bore. Pay attention to the alignment.
3. Connect the plug included in delivery to the cable of the temperature sensor.
4. Plug the plug of the temperature sensor into the supply board (A1) at slot X2.
5. Securely route the cable of the temperature sensor again and secure.
6. Mount the right side panel (➞ *'Mounting side panels' on page 54*).
7. Perform OFFSET alignment (➞ *Chapter 7.1.2 'Performing an OFFSET alignment' on page 95*).

Dismounting the temperature sensor T3 from the condenser

1. Switch off the device and remove from the network.
2. Dismount the right side panel (➞ *Chapter 6 'Repair' on page 53*).
3. Unplug plug X1 from the supply board (A1).

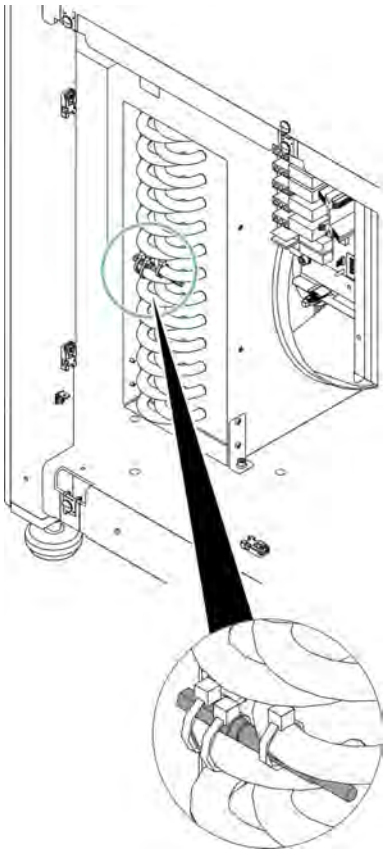

Fig. 61: Temperature sensor T3

4. Remove the cable fastenings from the cable of temperature sensor T3 (*Fig. 61*).
5. Remove temperature sensor T3.

Mounting temperature sensor T3 on the condenser

1. Mount the new temperature sensor on the condenser in the exact same position as before.
2. Distribute a sufficient amount of heat-conducting paste between the cooling line and temperature sensor T3.
3. Securely route the cable of temperature sensor T3 again and secure.
4. Plug the plug X1 into the supply board (A1).
5. Mount the right side panel (➞ *'Mounting side panels' on page 54*).
6. Perform OFFSET alignment (➞ *Chapter 7.1.2 'Performing an OFFSET alignment' on page 95*).

Dismounting temperature sensor T4 from the suction pipe

1. Switch off the device and remove from the network.
2. Dismount the rear panel (➞ *'Dismounting the rear panel' on page 54*).
3. Dismount the right side panel (➞ *'Dismounting side panels' on page 53*).
4. Unplug plug X3 from the supply board (A1).

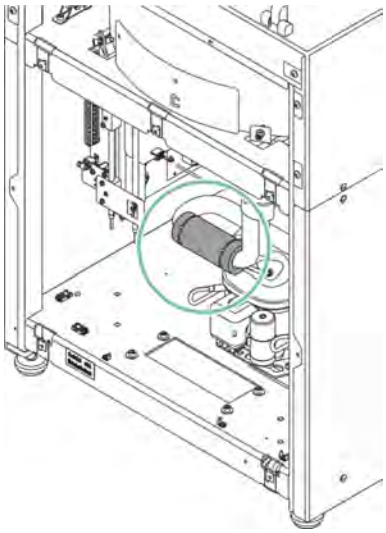

Fig. 62: Temperature sensor T4

5. Remove the cable fastenings from the cable of temperature sensor T4 (*Fig. 62*).
6. Pull temperature sensor T4 out of the insulation and remove.

Mounting temperature sensor T4 on the suction pipe

1. Mount the new temperature sensor T4 on the suction pipe in the exact same position as before.
2. Distribute a sufficient amount of heat-conducting paste between the cooling line and temperature sensor T4.
3. Securely route the cable of temperature sensor T4 again, secure, and restore the insulation.
4. Plug the plug X3 into the supply board (A1).
5. Mount the rear panel (➞ *'Mounting the rear panel' on page 56*).
6. Mount the right side panel (➞ *'Mounting side panels' on page 54*).
7. Perform OFFSET alignment (➞ *Chapter 7.1.2 'Performing an OFFSET alignment' on page 95*).

6.17 Fan

Dismounting the fan

Protective equipment:

- Cut-resistant protective gloves

1. Switch off the device and remove from the network.
2. Dismount the side panels (➞ *'Dismounting side panels' on page 53*).
3. Disconnect plug X9 from the supply board (A1) and remove the cable ties from the cable.

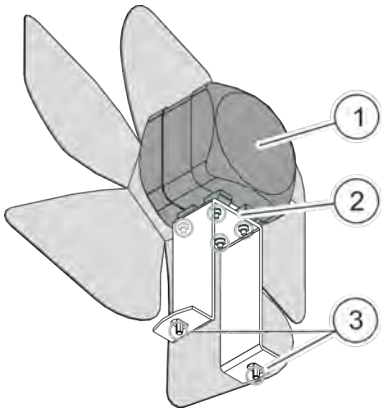

Fig. 63: Hex nuts on the fan motor

4. Screw the fan motor holder off of the base plate (*Fig. 63*/3).
5. Hold onto the fan by the fan motor (*Fig. 63*/1) and remove from the centrifuge laterally together with the holder.
6. Depending on the fan type, loosen 2 or 4 hex nuts (M 2.5) on the fan motor holder (*Fig. 63*/2) and remove.
7.

> CAUTION
>
> Risk of injury due to sharp edges on the component!

Remove the hex nuts (M 2.5) from the shaft, put them to the side, and remove the fan.

Mounting the fan

1. Insert a new fan blade with the writing facing out.
2. Screw the fan blade to the hex nut of the shaft at a torque of 1.4 Nm.
3. Depending on the fan type, insert 2 or 4 hex nuts (M 2.5) in the holder of the fan motor (*Fig. 63*/2) and firmly tighten.
4. Hold onto the fan by the fan motor (*Fig. 63*/1) and set into the housing with the fan holder.
5. Firmly screw down the fan holder (*Fig. 63*/3).
6. Mount the fan motor with holder in the device.
7. Connect the fan cable with plug X9 to the supply board (A1).
8. Re-establish the original cable routing with cable ties.
9. Mount the side panels (➞ *'Mounting side panels' on page 54*).

6.18 Motor closure unit

Dismounting the motor closure unit

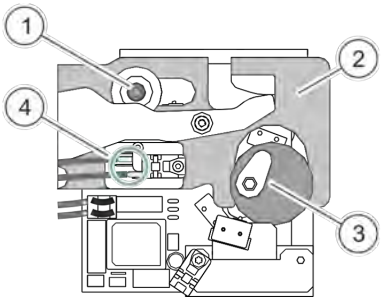

Fig. 64: Motor closure unit

1. Switch off the device and remove from the network.
2. Remove the lid lock (➞ *Chapter 6.15 'Lid lock' on page 76*).
3. Turn the eccentric disc (*Fig. 64*/3) with the Allen wrench until the hexagon socket faces upward.
4. Screw out the Allen screw (*Fig. 64*/1).
5. Lift up the pushrod (*Fig. 64*/2) and pull out of the eccentric disc.
6. Pull out both cables from the microswitch (*Fig. 64*/4).

Mounting the motor closure unit

1. Insert pushrod (*Fig. 64*/2) exactly at the eccentric disc.
2. Insert the Allen screw (*Fig. 64*/1) and firmly tighten.

3. Turn the eccentric disc (*Fig. 64*/3) with the Allen wrench until the hexagon socket faces toward the left.
4. Plug both cables into the microswitch (*Fig. 64*/6).

6.19 Gas spring

WARNING

Risk of injury due to mechanical pressure storage!

Gas springs can store pressures. Injuries can occur if these pressures are discharged uncontrollably due to the piston darting out.

- Only dismount gas springs when they are in their relaxed condition (with lid open).

Dismounting the gas springs

1. Switch off the device and remove from the network.
2. Open the lid as far as it can go.
3. Dismount the rear panel (➞ *'Dismounting the rear panel' on page 54*).
4. WARNING

   Risk of injury due to lid falling down!

   Support the lid with your hand and remove the connecting bolts with the retaining spring from the fork head of the gas spring (*Fig. 65*).

   ➡ The gas spring is detached at the top.
5. Screw the gas spring out of the lower bearing by hand and remove.

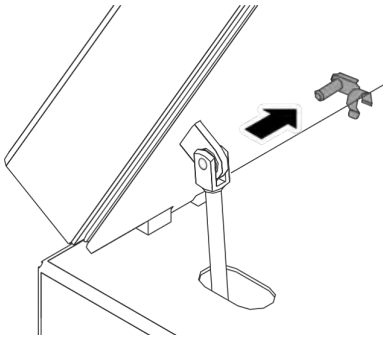

Fig. 65: Gas spring, top

6. Loosen the slotted screw (*Fig. 66*) on the lower bearing and remove.
7. Remove the lower bearing.
8. Carefully put the lid on the housing.

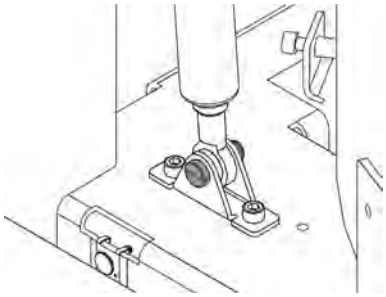

Fig. 66: Gas spring, bottom

Mounting the gas springs

1. Fasten the lower bearing with the slotted screw (*Fig. 67*).
2. Lift up the lid and hold onto it.
3. Guide the relaxed gas spring with the fork head through the housing opening from below.
4. Screw the gas spring to the lower bearing by hand.

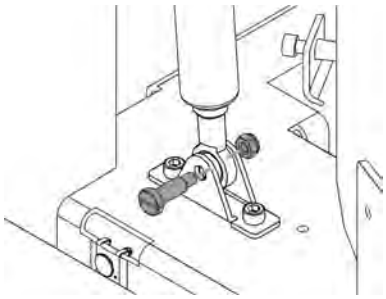

Fig. 67: Mounting the lower gas spring

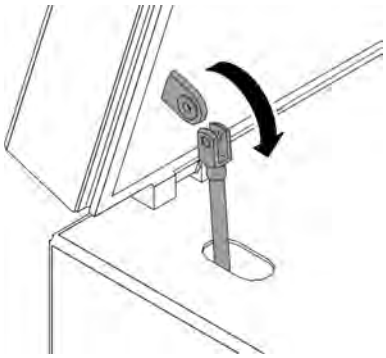

Fig. 68: Mounting the upper gas spring

5. Make the fork head of the gas spring flush with the connecting lug (*Fig. 68*).
6. Insert connecting bolts with the retaining spring and secure.
7. Mount the rear panel (➞ *'Mounting the rear panel' on page 56*).

6.20 Lid seal (between the centrifuge chamber and lid)

Dismounting the lid seal

1. Switch off the device and remove from the network.
2. Open the lid.
3.

> **NOTICE**
>
> **Danger of material damage to temperature sensor T1 due to uncontrollably pulling out the lid seal!**

   Pull the lid seal out of the groove with force but under control.

4. Pull temperature sensor T1 out of the sealing ring.
5. Free the groove completely of adhesive and rubber residues of the lid seal.

Mounting the lid seal

Material:

- Terostat IX

1. Apply Terostat IX in the groove.
2. Position the lid seal with the hole for the temperature sensor at front (centred at the temperature sensor), and stick the temperature sensor through it (*Fig. 69*).
3.

> *The lid seal is slightly bigger than the groove.*

   Work the lid seal into the groove with light pressure.

4. Press the lid seal into the groove, compressing it with a fabric cloth. The ventilation holes should be centred opposite of the temperature sensor.

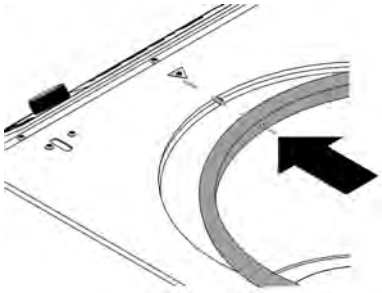

Fig. 69: Inserting new lid seal

6.21 Mains switch

1. Switch off the device and remove from the network.
2. Dismount the front faceplate (➞ *Chapter 6.4 'Front panel' on page 57*).
3. Disconnect the plug of the mains switch (*Fig. 23*).

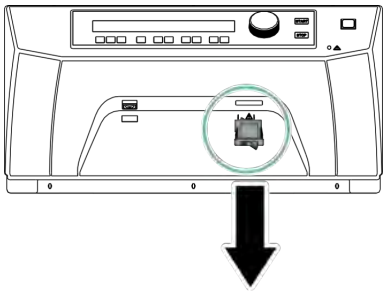

Fig. 70: Pushing out the mains switch

4. Push the mains switch out of the bottom part of the housing (*Fig. 70*).
5. Insert a new mains switch in the housing part (linktarget doesn't exist but @y.link.required='true').
6. Establish the cable connection to the mains switch (*Fig. 23*).
7. Mount the front faceplate (➦ *Chapter 6.4 'Front panel' on page 57*).

6.22 Key switch

Dismounting the key switch

1. Switch off the device and remove from the network.
2. Dismount the front faceplate (➦ *Chapter 6.4 'Front panel' on page 57*).
3. Screw off the nut (*Fig. 71*) of the key switch from the inside.

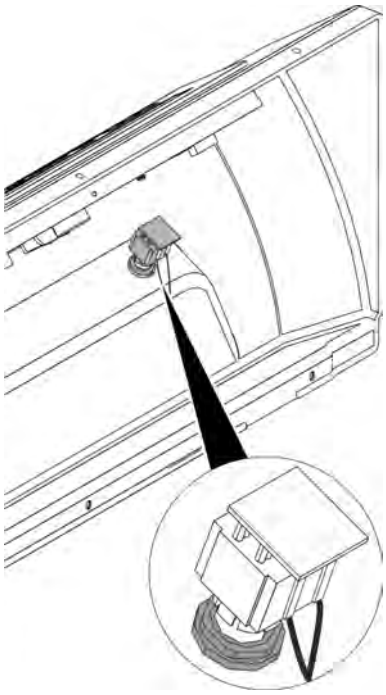

Fig. 71: Dismounting the key switch

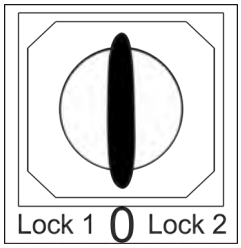

Fig. 72: Key switch middle position

4. Put the key switch into the middle position *[0]* (*Fig. 72*), unplug the contact sensor and pull the key switch out of the mounting hole.

Mounting the key switch

1. Put the key switch into the middle position, plug in the contact sensor and insert the key switch in the mounting hole.
2. Firmly screw the nut of the key switch onto the inside.
3. Mount the front faceplate (➦ *Further information on page 61*).

6.23 LED of the lid button

Dismounting the LED

1. Switch off the device and remove from the network.
2. Dismount the front faceplate (➡ *Chapter 6.4 'Front panel' on page 57*).
3. Turn the contact block board of the lid button counter-clockwise by 45° and remove (*Fig. 18*).
4. Remove the LED from the lid button (*Fig. 73*/1).

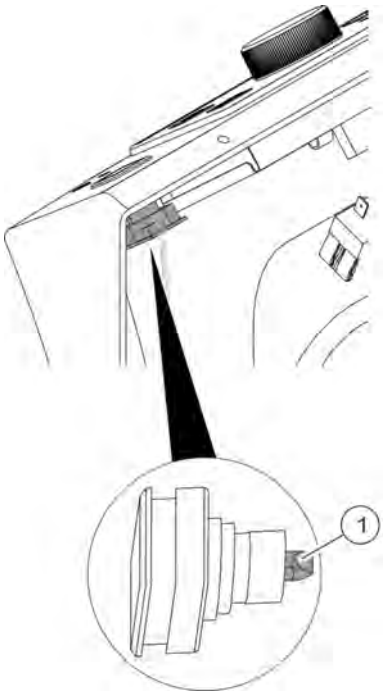

Fig. 73: LED lid button

Mounting the LED

1. Stick the LED on the lid button (*Fig. 73*/1).
2. Insert the contact block board of the lid button and turn counter-clockwise by 45° (*Fig. 18*).
3. Mount the front faceplate (➡ *Chapter 6.4 'Front panel' on page 57*).

6.24 Radio interference filter

Dismounting the radio interference filter

1. Switch off the device and remove from the network.
2. Dismount the right side panel (➡ *'Dismounting side panels' on page 53*).
3. Dismount the rear panel (➡ *'Dismounting the rear panel' on page 54*).
4. Disconnect the terminals L1 and N from the frequency converter (A2) (➡ *'ROTIXA 500RS_Diagramm_Kühlungsversion2' on page 122*) and pull the cable out of the terminal strip.

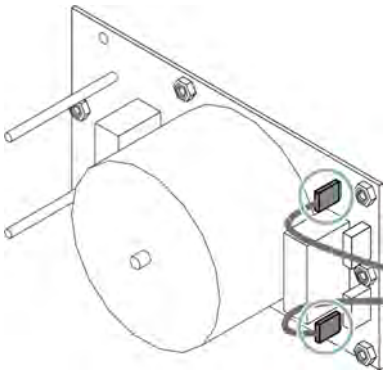

Fig. 74: Plug on the radio interference filter

5. Disconnect the plug from the radio interference filter (*Fig. 74*).
6. Screw the protective conductor connection of the radio interference filter out of the housing of the frequency converter.

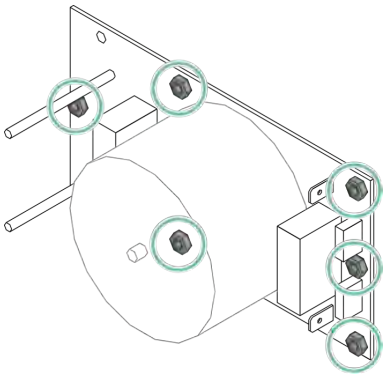

Fig. 75: Radio interference filter

7. Loosen the 6 fastening screws of the radio interference filter and remove (*Fig. 75*).
8. Remove the radio interference filter.

Mounting the radio interference filter

1. Insert the radio interference filter.
2. Insert the fastening screws of the radio interference filter and screw firmly.
3. Screw the protective conductor connection of the radio interference filter to the housing of the frequency converter.
4. Establish the plug connections to the radio interference filter.
5. Mount the cable at terminals L1 and N on the frequency converter (A2) (➞ *'ROTIXA 500RS_Diagramm_Kühlungsversion2' on page 122*).
6. Mount the right side panel (➞ *'Mounting side panels' on page 54*).
7. Mount the rear panel (➞ *'Mounting the rear panel' on page 56*).

6.25 Cooling circuit

All data concerning the cooling circuit (cooling schemes of the individual types and the circuit diagram of the cooling unit version) is in the appendix (➞ *Chapter 10.3 'Cooling scheme' on page 122*).

6.26 Performing function check after repair

Performing function check of the device after repair Perform a test run with the loaded rotor according to the instructions in the operating instructions.

During the test run

1. Ensure the following during the test run:
   - The function of all buttons and displays
   - The start-up and run-down times, as well as the maximum speed of the rotor (refer to the operating instructions for this)
   - Temperature in the centrifuge chamber corresponds to the set temperature
   - Function and correct setting of the imbalance switch-off
   - Current consumption (➦ *Chapter 10.1 'Technical data' on page 111*)

After the test run

NOTICE

Danger of material damage due to unauthorized personnel and unsuitable measuring devices!

- Only allow authorized electricians to do testing.
- Use measuring devices which meet the standard IEC 61557-16/DIN EN 61557-16. Recommendation: Electrical safety tester Fluke ESA 620 (It is imperative that the measuring device measure the leakage current downstream of measuring circuit "A.1 Measurement set-up for AC current with frequencies up to 1 MHz and for DC current" of the standard IEC 61010-1.)
- Ensure measuring conditions meet standard IEC 61010/DIN EN 61010.
- For test intervals, refer to DGUV regulations 100 – 500 or DGUV V3.

2. Perform a safety inspection after the test run. Ensure the following values:

Data	Value	Unit
Insulation resistance	> 2	MΩ
Protective conductor resistance	< 0,2	Ω
Leakage current	> 3.5	mA

7 Settings and queries

7.1 Start-up after repair

7.1.1 Initializing the centrifuge

WARNING

Risk of injury due to residual voltage!

After disconnecting the device from the mains or after switching off the mains switch, the intermediate circuit capacitors of the frequency converter (A2) are still charged. If they are touched, this can result in dangerous discharge and injuries.

- Wait for at least 180 seconds until the intermediate circuit capacitors of the frequency converter (A2) have discharged.
- Only then should the jumper be moved.

After replacing the control panels (A5) (➥ *Chapter 6.10 'Control panel (A5)' on page 70*), the encoding strip on the supply board (A1) (➥ *Chapter 6.8 'Supply board (A1)' on page 68*) or the frequency converters (A2) (➥ *Chapter 6.9 'Frequency converter (A2)' on page 69*), the following preconditions must be met:

- Jumpers on the encoding strip of the supply board (A1) must be plugged in according to the machine and cooling unit version (➥ *Chapter 10.4 'Cooling unit version' on page 123*).
- Frequency converter (A2) must be set on the machine.
- S-control panel must be set on the machine.

*If these preconditions are not met, the error message **VERSION ERROR 12** (➥ Tab. 13 'Overview of error messages on the display' on page 28) appears after switching on the machine.*

Preparing initialization

Precondition:

- The rotor is at a standstill.

1. Open the lid.
2. Switch off the machine via the mains switch.

There is an additional jumper on the encoding strip of the supply board (A1) for selecting the initialization and offset mode.

If neither of the two modes is available, the jumper is at position B.0-B.1 (Fig. 76).

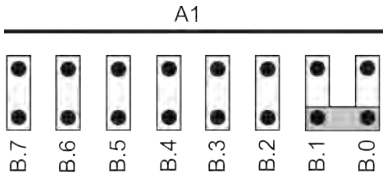

Fig. 76: Additional jumper at B.0-B.1

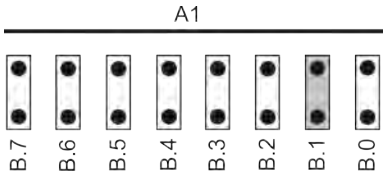

Fig. 77: Additional jumper at B.1 – Initialization mode

3.

WARNING

Risk of injury due to residual electric voltage!

Wait for voltage discharge (at least 180 s). Reconnect additional jumper (*Fig. 76*) at position B.1 (*Fig. 77*).

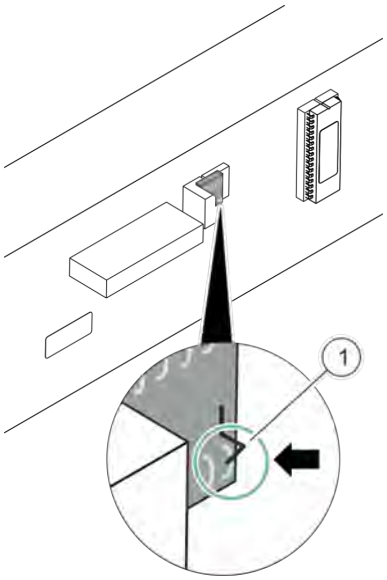

Fig. 78: Closing contact

4.

Battery connection

In the functional delivery state, the battery is already connected. Only when the control panel (A5) is replaced is the battery delivered without contact as standard, and must be connected at the DIP switch as follows.

NOTICE

Danger of material damage to contacts 2 to 5 of the DIP SWITCH!

Carefully press the spring of contact 1 on the DIP SWITCH downward and snap in. Contacts 2 to 5 must be open.

➡ The battery of the control panel (A5) is connected.

Perform initialization.

WARNING

Dangerous electrical voltage!

The device is switched on without the covering that protects against access and contact. The electronics and live components are freely accessible. This can result in life-threatening injuries due to contact with the electrical voltage.

- In the danger zone, pay careful attention to live parts and avoid direct contact.
- Make sure that uninvolved personnel are not active or present in the danger zone.
- Make sure that removed components or tools cannot result in bridging current.

1. Switch on the machine via the mains switch.

   ➡ NOTICE

   Do not switch off the machine.

   An acoustical signal beeps for the function check. After approx. 30 seconds, the error message CONTROL ERROR 92 appears.

   If the battery is not connected, the error message BATT is displayed (➞ *'Preparing initialization' on page 90*).

2. Switch the machine off and on again via the mains switch.

   ➡ The error message VERSION ERROR 12 is displayed.

3. Switch the machine off and on again via the mains switch.

   ➡ The message *INIT MODE* is displayed.

4. When the ▭ symbol flashes, open the machine lid.

5. Press the *[PROG]* key.

   ➡ The following displays can be called up (by repeatedly pressing the *[PROG]* key):

   INIT: VERSION NO.: 00 (machine version stored on the control panel (A5))

   °C/* NO.: 00 (cooling unit version stored on the control panel (A5))

   JUMPER: VERSION NO.: 12 (jumper assignment, machine version 12)

   °C/* NO.: 03 (jumper assignment, cooling unit version 03)

6. Press the *[START]* key.

➡ The control panel (A5) is initialized. The message ***OK*** is displayed.

Afterwards, the following displays are visible:

INIT: VERSION NO.: 12 (machine version stored on the control panel (A5))

°C/* NO.: 03 (cooling unit version stored on the control panel (A5))

JUMPER: VERSION NO.: 12 (jumper assignment, machine version 12)

°C/* NO.: 03 (jumper assignment, cooling unit version 03)

Initializing the frequency converter (A2)

7. Press the *[PROG]* key.

➡ The following displays are visible:

FC/CCI TYPE 1410 (type of frequency converter (A2))

SOFTWARE 115.3 (software version of the frequency converter (A2))

ADDRESS A (address of the frequency converter (A2))

PARAM-INIT xmyn (initialization information of the frequency converter (A2))

- x: Machine version
  0: Machine version not stored yet
  XXX: ROTIXA 500 RS
- m: Month of the last initialization
  1: January, 2: February, ..., 9: September, A: October, B: November, C: December
- y: Year of the last initialization
  1: 1995, 2: 1996, ..., 9: 2003, A: 2004, ..., F: 2009
- n: Number of completed initializations
  1: once, 2: twice, ..., 9: 9x, A: 10x, ..., F: 15x

8. Press the *[START]* key.

➡ The frequency converter (A2) is initialized. The message ***OK*** is displayed and flashes multiple times.

Afterwards, the following displays are visible:

FC/CCI TYPE 1410 (type of frequency converter (A2))

SOFTWARE 115.3 (software version of the frequency converter (A2))

ADDRESS A (address of the frequency converter (A2))

PARAM-INIT C111 (If the date is not yet set on the control panel (A5), then for m and y, the value "1" is displayed by default.)

Setting imbalance mode

9. Press the *[PROG]* key.
   - ➡ The message IMBALANCE MODE 2 is displayed.

> *IMBALANCE MODE 2 must be set.*

10. If IMBALANCE MODE 2 is not yet set, select the mode by turning the rotary knob.
11. Press the *[START]* key.
    - ➡ The setting is saved and the message ***OK*** is displayed.
12. Press the *[PROG]* key.
    - ➡ The message TEMP.AVERAGE 30 is displayed.
13. Select the "Temp.Average" time by turning the rotary knob.
14. Press the *[START]* key.
    - ➡ The setting is saved and the message ***OK*** is displayed.
15. Press the *[PROG]* key.
    - ➡ The message LEADING TIME/S 0 is displayed.

      0: "Leading Time" not set.
16. Select "Leading Time" by turning the rotary knob.
17. Press the *[START]* key.
    - ➡ The setting is saved and the message ***OK*** is displayed.
18. Switch off the machine via the mains switch.
19. ⚠ WARNING

    Risk of injury due to residual electric voltage!

    Wait for voltage discharge (at least 180 s). Connect additional jumper at position B.0-B.1 (*Fig. 79*).

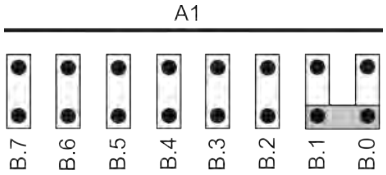

Fig. 79: Additional jumper at B.0-B.1

Setting the date and time

> *If the date and time are not yet set on the control panel (A5), the date and time display appears after the next switch-on of the machine. Operation is then only possible after entering the date and time.*

1. Press the *[□]* key.
   - ➡ The parameters (a: year, mon: month, d: day, h: hours, min: minutes) are selected in succession.
2. Set the desired parameters by turning the rotary knob.
3. Once all parameters are set, press the *[START]* key.
   - ➡ The setting is saved and the message ***OK*** is displayed.

When the control panel (A5) is put into operation for the first time (battery connected and initialization performed), the built-in clock is set to:

*Time **T : 0800***

*Date **DATE : 01 01 95***

In EVENT NO.: 1 there is then a random date and random time. The following is in the other EVENT numbers until a change is made:

T : 0000

DATE: 00 00 00

7.1.2 Performing an OFFSET alignment

OFFSET alignment

Measurement deviations between the temperature sensors (T1–T4) and the supply board (A1) are compensated for with an OFFSET alignment.

The offset value is the difference between the temperature measured by the temperature sensor and the corrected temperature (actual temperature).

Offset values are stored in the control panel (A5).

An OFFSET alignment must be performed after replacing the following components:

Replacement	OFFSET alignment to be performed
of a temperature sensor	Alignment of the affected temperature sensor
Supply board (A1)	Alignment of temperature sensors T2, T3 and T4.
Control panel (A5)	Alignment of temperature sensor T1, read out the old offset values of T2, T3 and T4 and input in the new control panel (A5).

Performing an OFFSET alignment

To perform a sensible OFFSET alignment, both the temperature sensor as well as the centrifuge chamber must be at room temperature again.

1. Open the lid.
2. Switch off the mains switch.
3. **WARNING**

   Risk of injury due to residual electric voltage!

   Wait for voltage discharge (at least 180 s). Move additional jumper on the encoding strip of the supply board (A1) from position B.0-B.1 to position B.0.

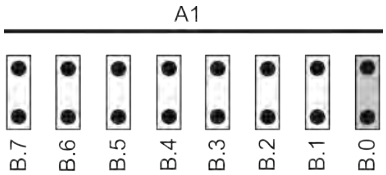

Fig. 80: Additional jumper at B.0

4. Switch on the mains switch.

   ➡ The message ***OFFSET MODE*** is displayed.
5. When the ▭ symbol flashes, open the lid.

6. Press the [□] key.
   - ➡ The following display is visible:

     T1= xx.xC.....xx.xC

     T1= designation of the temperature sensor

     xx.xC, left = temperature measured by the temperature sensor

     xx.xC, right = corrected temperature (actual temperature)
7. Set the actual measured temperature on the temperature sensor with the rotary knob. Save the setting by pressing the *[START]* key.
   - ➡ The message *** OK *** is displayed; then T1= xx.xC.....xx.xC appears.
8. Repeat steps 5 and 6 until the actual temperatures of all temperature sensors (T1 to T4) are input.
9. Switch off the mains switch.
10. ⚠ WARNING

    Risk of injury due to residual electric voltage!

    Wait for voltage discharge (at least 180 s). Move additional jumper on the encoding strip of the supply board (A1) from position B.0 back to position B.0-B.1.

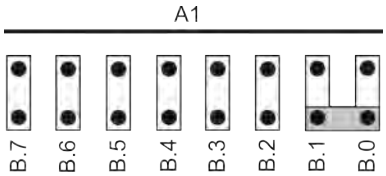

Fig. 81: Additional jumper at B.0-B.1

11. Carrying out a test run. Compare sample temperature with temperature setpoint:
    - Sample temperature < temperature setpoint: Offset value of T1 and T2, to reduce the deviation
    - Sample temperature > temperature setpoint: Offset value of T1 and T2, to increase the deviation

7.1.3 Setting imbalance mode

Warning: Residual voltage

⚠ WARNING

Risk of injury due to residual voltage!

After disconnecting the centrifuge from the mains or after switching off the mains switch, the intermediate circuit capacitors of the frequency converter (A2) are still charged. In the event of contact, this can result in dangerous discharge and injuries.

- Wait for at least 180 s until the intermediate circuit capacitors of the frequency converter (A2) have discharged.
- Only then should the jumper be moved.

Setting imbalance mode on the supply board (A1)

Set imbalance mode on the supply board (A1) and in the program.

At plug X8, there must be a jumper connected at position of pins 3-5 (factory setting). Always make sure of this, also after replacing the supply board (A1)!

Setting imbalance mode in the program

Imbalance mode can only be set when the rotor is at a standstill and the lid is open.

1. Open the lid.
2. Switch off the mains switch.
3. WARNING

   Risk of injury due to residual electric voltage!

   Wait for voltage discharge (at least 180 s). Stick an additional jumper on the encoding strip of the supply board (A1) at position B.1.

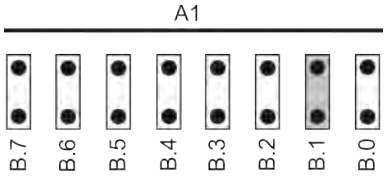

Fig. 82: Additional jumper at B.1

4. Switch on the mains switch.

   ➡ The message *INIT_MODE* appears.
5. When the ▭ symbol flashes, open the lid.
6. *IMBALANCE MODE 2 must be set. Always make sure of this, also after replacing the supply board (A1).*

   Press the *[PROG]* key until IMBALANCE MODE 2 appears.
7. Set "Imbalance Mode 2" with the rotary knob. Save the setting with the *[START]* key.
8. Switch off the mains switch.
9. WARNING

   Risk of injury due to residual electric voltage!

   Wait for voltage discharge (at least 180 s). Move additional jumper on the encoding strip of the supply board (A1) from position B.1 back to position B.0-B.1.

7.2 Adjusting the contrast of the display

NOTICE

Damage to the electronics due to short circuit on the circuit board!

The bridging of live parts can result in short circuits and therefore to damage to the electronics.

– Use a screwdriver with insulating shaft.

Adjust the contrast of the display on the trim potentiometer with a screwdriver:

- *Turning clockwise increases the contrast.*
- *Turning counter-clockwise reduces the contrast.*

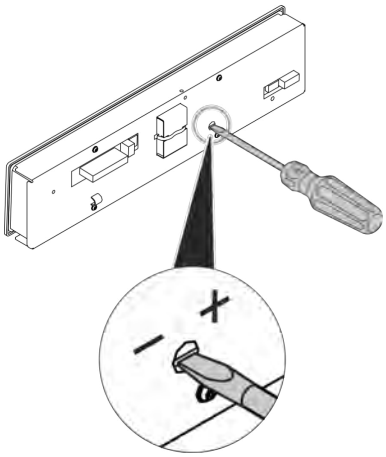

Fig. 83: Trim potentiometer

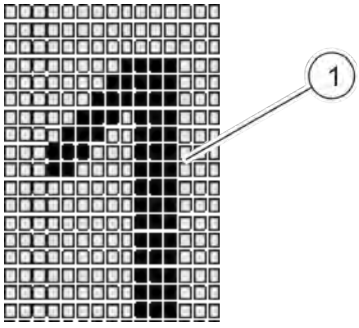

Fig. 84: Adjusting the contrast

Adjust the trim potentiometer on the control panel (A5) (*Fig. 83*) with a screwdriver such that the background pixels (*Fig. 84*/1) on the display are faintly visible.

7.3 Setting the hours of operation

It is only possible to query and change the hours of operation when the rotor is at a standstill.

Setting the hours of operation

1. Open the lid.
2. Keep the *[t]* key pressed for 8 seconds.
   - ➡ After 8 seconds, SOUND / BELL OFF/ON1/ON2 is displayed.
3. Press the *[t]* key again.
   - ➡ The hours of operation (CONTROL:) are displayed. The display turns off automatically after 10 s.
4. Press the *[Start-up parameters]* to set the hours of operation.
5. Set the hours of operation with the rotary knob.
6. Press the *[START]* key.
   - ➡ The settings are saved; as a confirmation, *** ok *** is briefly displayed.

7.4 Setting the "Temp.Average" time

After starting a centrifugation run, the temperature setpoint is shown on the display for a certain time before the current temperature is displayed.

The "Temp.Average" time can be set from 5 to 180 seconds in steps of 1 second, and is preset to 30 seconds.

Setting the "Temp.Average" time

The "Temp.Average" time can only be set when the rotor is at a standstill and the lid is open.

1. Open the lid.
2. Switch off the mains switch.
3. Dismount the right side panel (➞ *'Dismounting side panels' on page 53*).
4. **WARNING**

   Risk of injury due to residual electric voltage!

   Wait for voltage discharge (at least 180 s). Move additional jumper on the encoding strip of the supply board (A1) from position B.0-B.1 to position B.1 (*Fig. 85*).

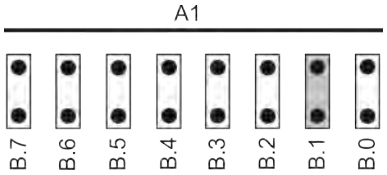

Fig. 85: Additional jumper at B.1

5. Switch on the mains switch.

   ➡ The message *INIT_MODE* appears.
6. When the ▭ symbol flashes, open the lid.
7. Press the *[PROG]* key repeatedly until TEMP.Average 30 appears.
8. Set the "Temp.Average" time with the rotary knob.
9. Press the *[START]* key.

   ➡ The settings are saved; as a confirmation, *** OK *** is briefly displayed.
10. Switch off the mains switch.
11. **WARNING**

    Risk of injury due to residual electric voltage!

    Wait for voltage discharge (at least 180 s). Move additional jumper on the encoding strip of the supply board (A1) from position B.1 back to position B.0-B.1 (*Fig. 86*).

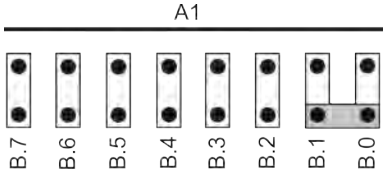

Fig. 86: Additional jumper at B.1-B.0

12. Mount the right side panel (➞ *'Dismounting side panels' on page 53*).

7.5 Setting the "Leading Time"

Setting the "Leading Time"

In the case of centrifugation runs at low speeds and/or long run-down times, it can happen that the samples are undercooled while the rotor is running down.

To prevent the samples from undercooling, before the end of the run-time, the switch-on temperature of the cooling unit is increased from the temperature setpoint + 0.5 K to + 2.5 K.

The time starting from the increase of the switch-on temperature to the end of the run-time is called the "Leading Time". It can be set from 0 to 180 s.

> *Setting the "Leading Time" does not work for centrifugation runs with the setting "Continuous run" or if the centrifugation run is aborted by pressing the [STOP] key. The factory setting of the centrifuge has a "Leading Time" of 0 set ("Leading Time" deactivated).*

The "Leading Time" can only be input when the rotor is at a standstill and the lid is open.

1. Open the lid.
2. Switch off the mains switch.
3. Dismount the right side panel (➦ *'Dismounting side panels' on page 53*).
4. ⚠ WARNING

   Risk of injury due to residual electric voltage!

   Wait for voltage discharge (at least 180 s). Move additional jumper on the encoding strip of the supply board (A1) from position B.0-B.1 to position B.1 (*Fig. 87*).

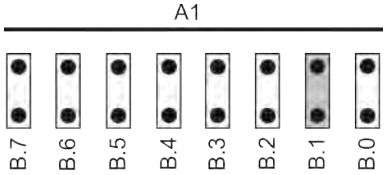

Fig. 87: Additional jumper at B.1

5. Switch on the mains switch.

   ➡ The message ***INIT_MODE*** appears.
6. When the ▭ symbol flashes, open the lid.
7. Press the *[PROG]* key repeatedly until **LEADING TIME / S 0** appears:
8. Set the "Leading Time" with the rotary knob.
9. Press the *[START]* key.

   ➡ The settings are saved; as a confirmation, ***** OK ***** is briefly displayed.
10. Switch off the mains switch.
11. ⚠ WARNING

    Risk of injury due to residual electric voltage!

    Wait for the voltage to discharge (at least 180 seconds). Move additional jumper on the encoding strip of the supply board (A1) from position B.0 back to position B.0-B.1 (*Fig. 88*).

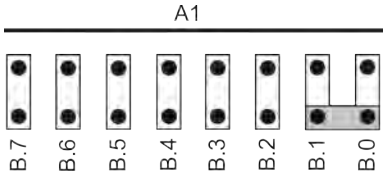

Fig. 88: Additional jumper at B.0-B.1

12. Mount the right side panel (➦ *'Dismounting side panels' on page 53*).

7.6 Setting the lid lock version

On the supply board, there is an encoding strip for setting the lid lock version.

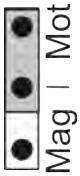

Fig. 89: Lid lock position jumper

→ Connect the jumper at the upper position "Mot" (*Fig. 89*), in order to change from the manual lid lock to the motor-driven lid lock.

7.7 Querying the motor slip

Motor slip query

If the actual speed is more than 5 % less than the nominal rotor speed, the error message (N < MIN 13) will appear on the display. The centrifuge controller can regulate the speed depending on the rotor.

To determine the slip, perform the following steps:

1. → Start the centrifugation run.
2. → Wait until the set speed is reached.
3. → Keep the *[n]* key pressed for 8 seconds.
   ➡ The display (*Fig. 90*) appears.
4. → *Slip is calculated by subtracting the rotor speed (actual speed; Fig. 90/1) from the field speed (nominal speed; Fig. 90/2).*

   Exit the slip display by pressing the *[n]* key.

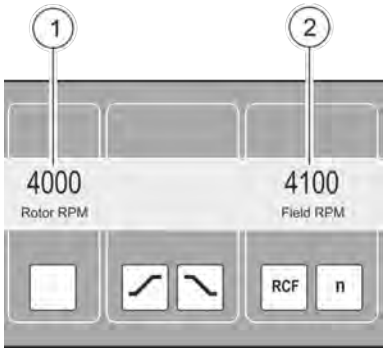

Fig. 90: Rotor speed and field speed

7.8 Querying temperatures

Temperatures can be queried starting from program version V 5.580, but only during the centrifugation run.

If a jumper is connected at position B.3 on the encoding strip of the supply board, the actual temperature value of the supply board corresponds to the evaluated sensor temperatures. For the sensor evaluation, see ➡ Chapter 10 'Appendix' on page 111.

1. → Open the lid.
2. → Switch off the mains switch.
3. → Dismount the right side panel (➡ *'Dismounting side panels' on page 53*).

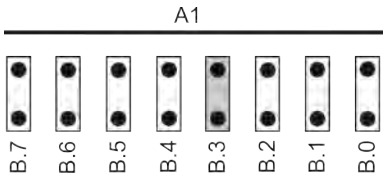

Fig. 91: Jumper B.3, temperature query

Fig. 92: Special display, jumper B3

4. **WARNING**

   Risk of injury due to residual electric voltage!

   Wait for the voltage to discharge (at least 180 seconds). Move additional jumper on the encoding strip of the supply board (A1) from position B.0-B.1 to position B.3 (*Fig. 91*).

5. Switch on the mains switch.

   ➡ The special display of the set jumper B3 is shown as "B3" on the display.

6. Start the centrifugation run.

7. Keep the [□] key pressed for 8 seconds.

   ➡ "Display 1" appears:

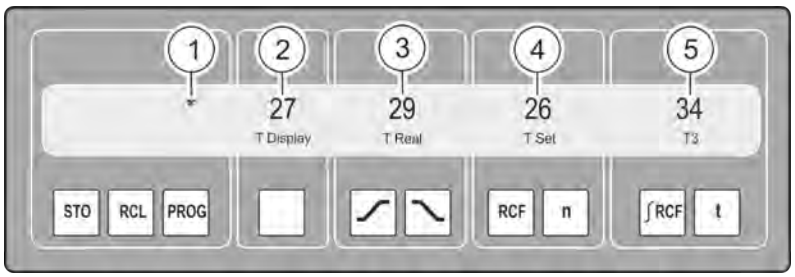

Fig. 93: Display 1, querying temperature

1 * = compressor switched on
2 T Display = temperature value on the display
3 T Real = actual temperature value of the supply board
4 T SET = temperature setpoint
5 T3 = temperature value of the temperature sensor on the condenser

8. Press the *[n]* key again.

   ➡ "Display 2" appears:

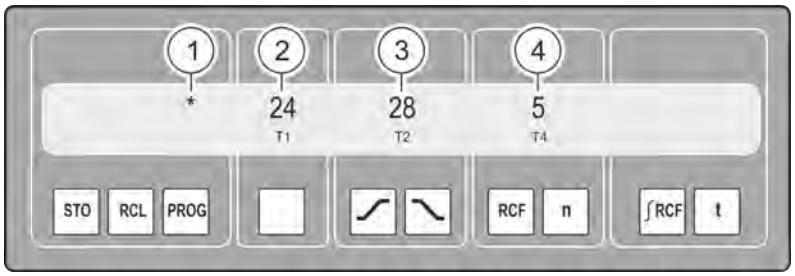

Fig. 94: Display 2, querying temperature

1 * = compressor switched on
2 T1 = temperature value of the temperature sensor (T1)
3 T2 = temperature value of the temperature sensor (T2)
4 T4 = temperature value of the temperature sensor (T4)

9. To exit the temperature display, press the [□] key.

10. Mount the right side panel (➡ *Chapter 6.1 'Side panels' on page 53*).

7.9 Temperature smoothing

Temperature-dependent temperature smoothing

By setting jumper B3 (before switching on) on the supply board, temperature smoothing (extended temperature calculation) is activated.

Temperature smoothing is activated after the set temperature setpoint is reached for the first time, and remains activated until standstill is reached.

It is activated for every run when the temperature setpoint is reached for the first time.

After reaching the temperature setpoint and the accompanying activation of the temperature smoothing, the symbol "ST" is also displayed on the special display.

Temperature smoothing activated at the start

By setting jumpers B3 and B2 (before switching on) on the supply board, temperature smoothing is activated immediately after the start when the nominal speed is less than or equal to 1400 RPM.

In the case of nominal speeds higher than 1400 RPM, temperature smoothing is only activated after reaching the temperature setpoint for the first time (➦ *'Temperature-dependent temperature smoothing' on page 102*).

In addition, the switching on of the cooling unit is prevented during braking and at speeds below 1000 RPM.

1. Open the lid.
2. Switch off the mains switch.
3. Dismount the right side panel (➦ *'Dismounting side panels' on page 53*).
4. ⚠ WARNING

   Risk of injury due to residual electric voltage!

   Wait for voltage discharge (at least 180 s). Move additional jumper on the encoding strip of the supply board (A1) from position B.0-B.1 to position B.2-B.3 (*Fig. 95*).
5. Mount the right side panel (➦ *Chapter 6.1 'Side panels' on page 53*).

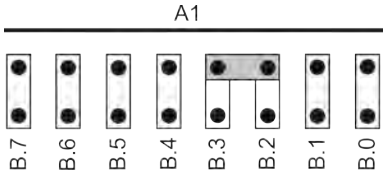

Fig. 95: Jumpers B.2-B.3, temperature smoothing

"AVERAGE F" value

The special temperature calculation is influenced by the value "AVERAGE F".

In the "AVERAGE F" menu, the value can be set between 1 and 10 (default value = 4).

1. Switch on the mains switch.
2. Open the lid.
3. Switch the mains switch off and back on (switch setting I).
4. The first time the display visibly changes (inverse display), press the *[STOP]* key.

   ➡ PROGRAM 1, LAST PROGRAM appears on the display.
5. Press the *[STOP]* key until AVERAGE F appears on the display.
6. Set the desired value with the rotary knob.

7. Press the *[START]* key to save the setting.

   ➡ ***OK*** appears on the display as confirmation.

7.10 Activating the program link (option)

Optionally, multiple centrifugation runs can be linked by means of the program link.

1. Open the lid.
2. Switch off the mains switch.
3. Dismount the right side panel (➞ *'Dismounting side panels' on page 53*).
4. ⚠ WARNING

   Risk of injury due to residual electric voltage!

   Wait for voltage discharge (at least 180 s). Connect jumper on the encoding strip of the supply board (A1) at position B.6 (*Fig. 96*).

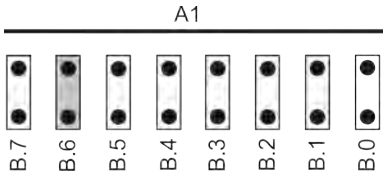

Fig. 96: Jumper at B.6

5. Mount the right side panel (➞ *'Dismounting side panels' on page 53*).

8 Replacement parts

Spare parts and all information about spare parts are available from Andreas Hettich GmbH & Co. KG or their local representative.

Using original spare parts

WARNING

Risk of accident due to installation of third-party components!

All installed components must be provided or approved for use by the manufacturer. The installation of third-party components can result in damage, loss of function and serious accidents. If third-party components are installed and used, the warranty will be void, as well as the responsibility of the manufacturer for consequential damage.

- Always use original spare parts.

NOTICE

Material damage due to improper transport and incorrect storage!

The device and the associated spare parts can be damaged due to incorrect transport and storage. After installation, defective spare parts can result in further errors and hazards.

Transport/store packaging items/spare parts under the following conditions:

- Do not store outdoors.
- Store dry and dust-free.
- No exposure to aggressive media.
- Protect against sunlight.
- Avoid mechanical shocks.
- Storage temperature: -10 °C to max. 50 °C
- Relative humidity: min. 1 % max. 90 %
- Air pressure: min. 500 hPa, max. 1060 hPa
- If stored for longer than 3 months, regularly check the general condition of all parts and the packaging.

  If required, refresh the preservative or replace it.

  Under certain conditions, there might be storage instructions on the packages/replacement parts which go beyond the requirements named here. These must be followed accordingly!

9 Disposal

9.1 General information

The device can be disposed of via the manufacturer.

A Return Material Authorisation (RMA) form must always be requested for a return.

If necessary, contact the Technical Service Department of the manufacturer:

- *Andreas Hettich GmbH & Co. KG*
- *Föhrenstraße 12*
- *78532 Tuttlingen, Germany*
- *Phone: +49 7461 705 1400*
- *E-Mail: service@hettichlab.com*

Disposal costs may be incurred.

WARNING

Risk of pollution and contamination for people and the environment.

When disposing of the centrifuge, people and the environment may be polluted or contaminated by incorrect or improper disposal.

- Removal and disposal may be carried out only by a trained and authorized service personnel.

WARNING

Contamination with infectious substances!

As the device is intended to come into contact with blood, it must be classified as infectious.

- Decontaminate and clean the centrifuge thoroughly before transport and disposal.
- Wear appropriate protective clothing when transporting and dismantling the centrifuge.
- Only dismantle the centrifuge using suitable tools so as to prevent injuries due to slipping, for example.
- During dismantling, re-clean and decontaminate components contaminated with infectious material that is found in previously inaccessible places.
- Recycle decontaminated components separately:
  - Scrap metals. o Forward plastic elements for recycling.
  - Forward plastic elements for recycling.
  - Dispose of the remaining components according to their material properties.

CAUTION

Risk of injury due to sharp edges

- Wear cut-resistant gloves.

The device is intended for the commercial sector ("Business to Business" - B2B).

According to Directive 2012/19/EU, the devices may no longer be disposed of with household waste.

The appliances are assigned to the following groups according to the Stiftung Elektro-Altgeräte Register (EAR (German foundation under civil law)):

- Group 1 (Temperature exchange equipment)

The crossed-out wheelie bin symbol indicates that the device must not be disposed of with household waste. Regulations on disposal may differ in individual countries. If necessary, contact the supplier.

Fig. 97: household waste ban

9.2 Scrap types

Disassembly and disposal must be carried out only by a disposal company.

WARNING

Risk of injury and danger to the environment due to incorrect disposal of chemicals.

The device may contain refrigerant, oil and batteries. Improper disassembly and disposal may result in serious injury and environmental damage.

- Before dismantling, take appropriate measures to absorb escaping liquids at the work site.
- Do not allow chemicals to enter the environment during final cleaning.
- Collect refrigerants, oil and batteries separately and send them for recycling.

WARNING

Risk of injury and danger to the environment due to incorrect disposal of gas and tension springs.

Gas and tension springs are pressurised and filled with oil. Improper disassembly and disposal may result in serious injury and environmental damage.

- Only have gas and tension springs dismantled and disposed of by specialist workshops.
- Do not open gas and tension springs.
- Do not heat gas and tension springs to temperatures above 80 °C.
- Dispose of gas and tension springs via the commodity trade or a hazardous waste collection point.
- Do not dispose of gas and tension springs in household waste. Oil must not get into soil or water.

To disassemble the individual components, contact the manufacturer's Service Department.

Recycle decontaminated components separately. Example of assignment:

Scrap type	Components
Sheet metal:	Side panels, rear panel, front panel, front plate
Plastic:	Front panel, motor cover, adapter (accessories)
Electronic waste:	Control device, mains switch, key switch, speed sensor, speed and imbalance sensor, power supply circuit board, radio interference suppression filter, frequency converter
Copper scrap:	Copper pipes
Cable scrap:	Temperature sensor, stranded wires, control cable, ribbon cable
Light and mixed scrap:	Motor frame, gas spring, machine frame, cover lock, rotor, bucket, condenser, screws
Motor scrap:	Motor, fan
Commercial residual waste:	Rubber sleeve, seal, sealing ring, rubber-metal bearing
Used oil:	Oil
Miscellaneous:	Batteries

9.3 Battery disposal

WARNING

Risk of injury and hazards for people and the environment due to incorrect disposal.

Batteries may contain substances that are harmful for the environment and human health.

Extra care is required owing to the particular risks involved when handling lithium batteries.

The separate collection and recycling of old batteries and rechargeable power packs is intended to prevent negative impacts on the environment and human health.

- At the end of their useful life, do not dispose of batteries with household waste.
- At the end of their useful life, dispose of batteries via a collection point or the device manufacturer.

This centrifuge contains a non-rechargeable lithium battery. It can be removed from the device. For removal of the old battery, refer to the "Replace battery" section.

9.4 Cooling circuit

This is a representation by way of example.

Selector switch settings are to be selected depending on the suction pump and accessories used. Observe the corresponding documentation.

Fig. 98: Refrigerant recycling bottle - Suction pump - Puncture using cold pliers

Personnel:

- refrigeration specialist

1. Puncture the copper pipe using cold pliers.
2. Connect to the suction pump using a hose.

3. Open the valve of the recycling bottle and extract the refrigerant.
4. After the extraction process, remove the copper pipes (saw, pipe cutter, etc.) and dispose of them.
5. Also disconnect the condenser from the copper pipes.
6. Dismantle the compressor and condenser from the machine frame.
7. Loosen 4 hexagon socket screws in each case and dispose of them together with the condenser.
8. Drain the oil from the compressor and dispose of it separately.
9. Drain the oil from the disconnected copper pipe connections.
10. Dispose of the machinery frame with the centrifuge chamber.

10 Appendix

The following other applicable documents are included in the appendix:

- Technical data
- Connection plan
- Cooling scheme
- Cooling unit version
- Rotor tacho code
- Maintenance log

10.1 Technical data

Manufacturer	Andreas Hettich GmbH & Co. KG 78532 Tuttlingen GERMANY			
Model	ROTIXA 500 RS			
Type	4950, 4950-50		4950-70, 4950-80	
Mains voltage (± 10 %)	230 – 240 V ~	220 V ~	230 – 240 V ~	220 V ~
Mains frequency	50 Hz	60 Hz	50 Hz	60 Hz
Connected load	3800 VA			
Current consumption	16 A			
Cooling medium	R 452A*			
Max. capacity	4 x 1000 ml			
Allowed density	1.2 kg/dm³			
Speed (RPM)	11500			
Acceleration (RCF)	18038			
Kinetic energy	59620 Nm			
Inspection obligations (DGUV regulations 100 – 500)	yes			
Ambient conditions (EN/IEC 61010-1):				
Set-up site	Indoors only			
Height	up to 2000 m above sea level			
Ambient temperature	5 °C – 35 °C			
Humidity	Maximum relative humidity 80 % for temperatures up to 3 °C, linearly decreasing to 50 % relative humidity at 40 °C			
Overvoltage category (IEC 60364-4-443)	II			

Degree of contamination	2			
Device protection class	I Not suitable for use in explosion-endangered areas.			
EMC Emitted interference, immunity to interference	EN/IEC 61326-1, class B			
Noise level (rotor-dependent)	≤ 65 dB(A)		≤ 63 dB(A)	
Dimensions:				
Width	650 mm			
depth	814 mm			
Height	973 mm			
Weight	ca. 219 kg		ca. 233 kg	

Tab. 23: Technical data

* The specifications about the refrigerant and amount on the nameplate apply.

10.2 Connection plan

4950 and 4950-50

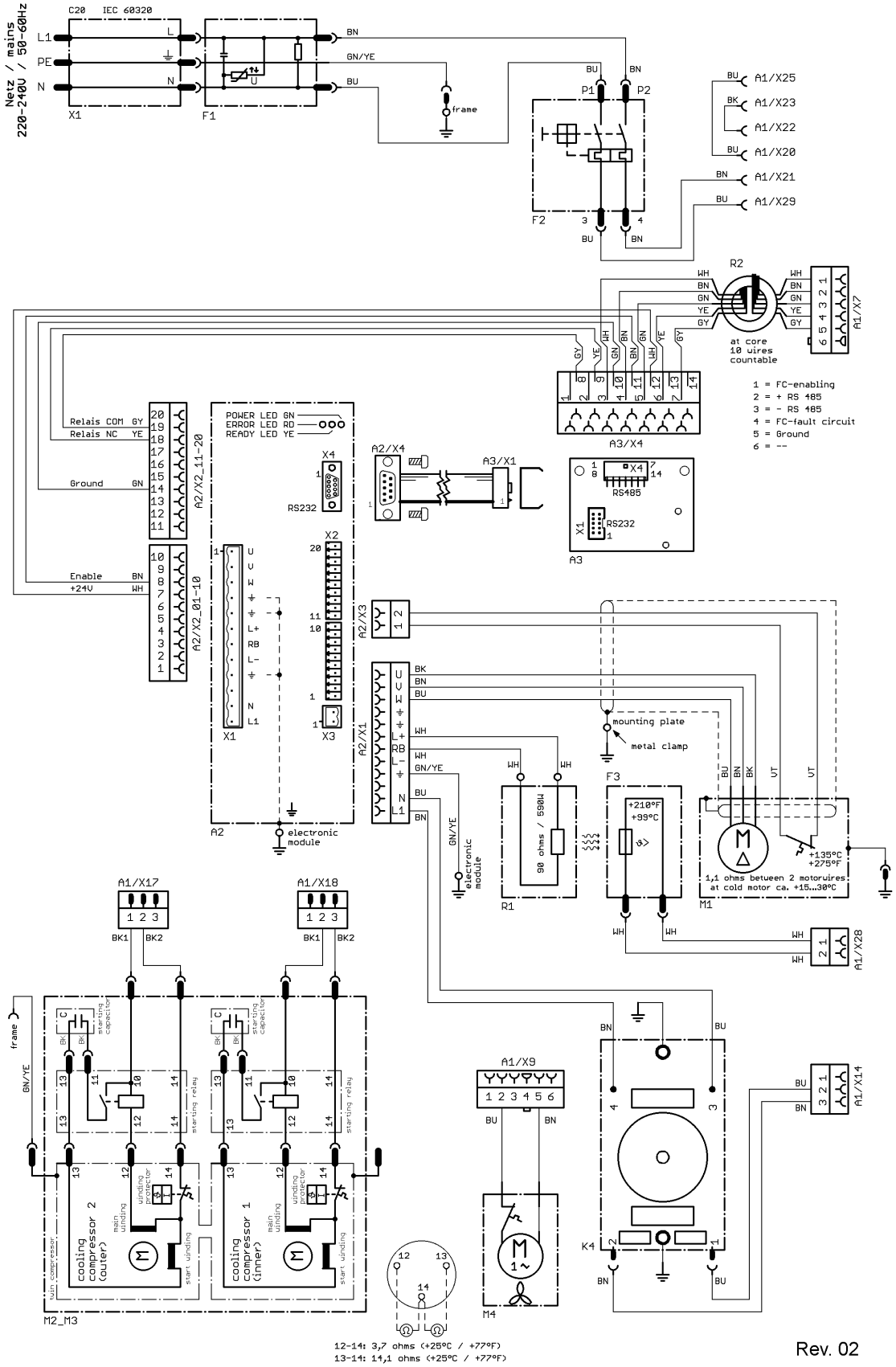

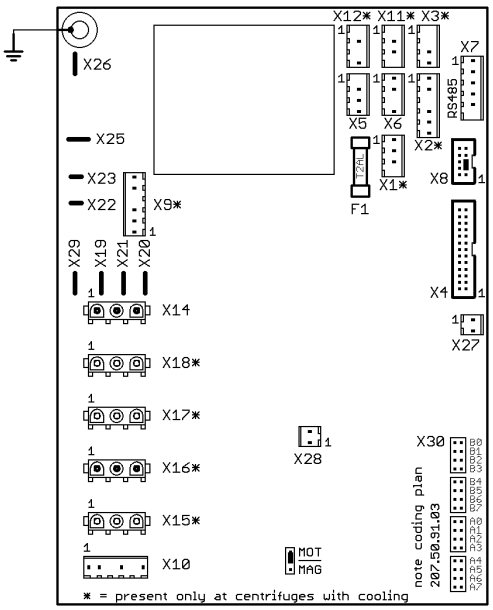

A1.

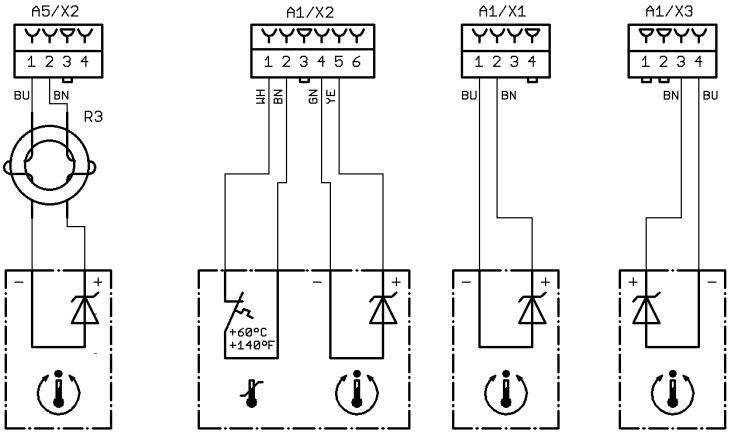

A1	supply board R	Versorgungsplatine R
A1/X30	coding jumper strip	Kodierleiste
A2	frequency converter	Frequenzumrichter
A3	converter board LTI-CDB	Wandlerplatine LTI-CDB
A5	control panel S	Steuerteil S
A5.1	interface PLD (optional)	Schnittstelle PLD (optional)
A6	optical interface RS485 (optional)	Opto-Schnittstelle RS485 (optional)
A7	key switch	Schlüsselschalter
A8	motor driven lid locking	motorischer Deckelverschluss
B1	temperature sensor T1 in lid gasket	Temperaturfühler T1 in der Deckeldichtung
B2	temperature sensor T2 / overheating protection 60°C / 140°F	Temperaturfühler T2 / Temperaturschutz 60°C / 140°F
	at chamber bottom in centrifuge chamber	am Kesselboden
B2.1	temperature sensor T2 / overheating protection 80°C / 176°F	Temperaturfühler T2 / Temperaturschutz 80°C / 176°F
	at chamber bottom in centrifuge chamber (only at heating/cooling version)	am Kesselboden (nur bei Version Heizen / Kühlen)
B3	temperature sensor T3 at condenser	Temperaturfühler T3 am Kondensator
B4	temperature sensor T4 at suction pipe	Temperaturfühler T4 am Saugrohr
B5	speed sensor / rotor identification	Drehzahlsensor / Rotorerkennung
E1	heating (only at heating/cooling version)	Heizung (nur bei Version Heizen / Kühlen)
F1	overvoltage protection	Überspannungsschutz
F2	mains switch with overcurrent protection	Netzschalter mit Überstromschutz
F3	overheating protection for braking resistor	Übertemperaturschutz am Bremswiderstand
F6	overpressure switsch	Überdruckschalter
K4	radio suppression filter	Funkentstörfilter
M1	motor of centrifuge	Motor der Zentrifuge
M2_M3	cooling compressor	Verdichter
M4	fan at condenser	Lüfter am Kondesator
R1	braking resistor	Bremswiderstand
R2	interference coil for supply board	Entstördrossel Versorgungsplatine
R3	interference coil for temperature sensor in lid gasket	Entstördrossel für Temp.-sensor in der Deckeldichtung
S2	imbalance switch	Unwuchtschalter
S3	push button switch "open lid"	Taster "Deckel öffnen"
S4	micro switch at left lid lock	Mikroschalter am linken Verschluss
S5	switch at slide rod (clossed = start possible)	Schalter an der Schubstange (geschlossen=Start möglich)
S6	switch excentric positon at lid locking	Schalter für Excenterposition des Verschlussmotors
W1	flat cable supply board R <> control panel S	Steuerleitung Versorgungsplatine <> Steuerteil S
W2	flat cable frequency converter <> converter board LTI-CDB	Steuerleitung Frequenzumrichter <> Wandlerplatine LTI-CDB
W3	flat cable interface PLD <> optical interface RS485	Steuerleitung Schnittstelle PLD <> Opto-Schnittstelle RS485
W4...W34	internal wiring, flat cable separately listed above	interne Verdrahtung, Flachbandkabel getrennt aufgeführt
X1	appliance inlet	Gerätestecker
Y2	magnetic valve 2nd capillary tube	Magnetventil zweites Kapillarrohr

Rev. 02

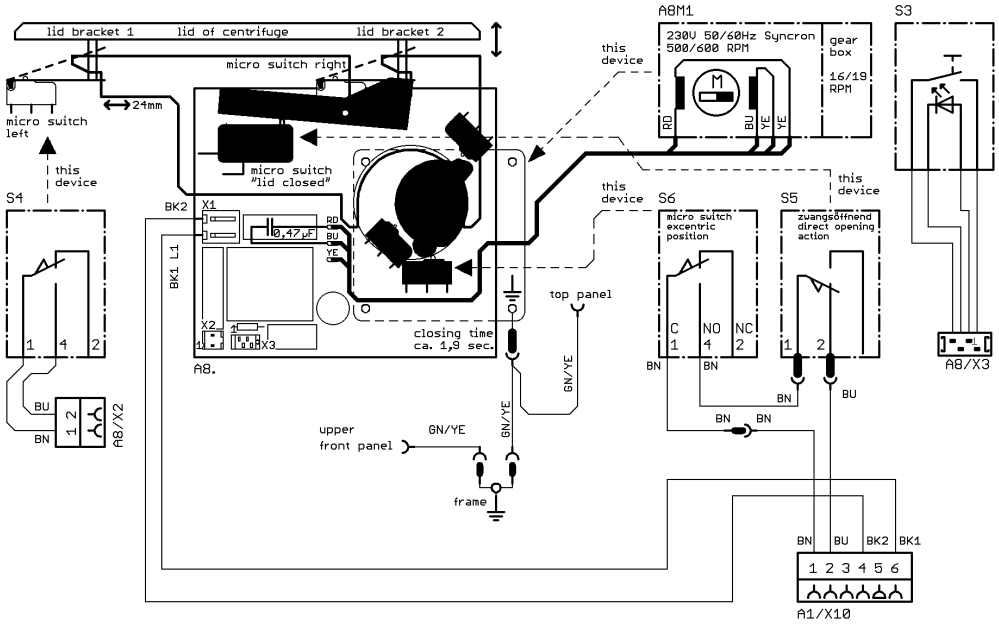
lid bracket 1
lid of centrifuge
lid bracket 2
micro switch right
24mm
micro switch left
this device
micro switch "lid closed"
S4
BK2
X1
0,47µF
RD
BU
YE
BK1 L1
X2
X3
A8.
closing time ca. 1,8 sec.
top panel
GN/YE
upper front panel
frame
A8/X2
A8M1
230V 50/60Hz Syncron 500/600 RPM
gear box
16/19 RPM
S3
A8/X3
S6
micro switch excentric position
S5
zwangsöffnend direct opening action
C NO NC
BN
BU
A1/X10
1 2 3 4 5 6

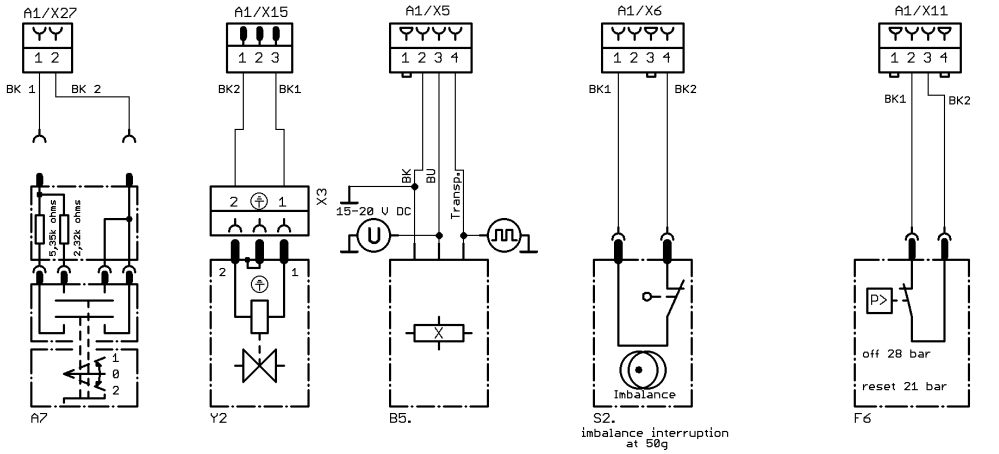
A1/X27
BK 1
BK 2
5,28k ohms
2,32k ohms
A7
A1/X15
BK2
BK1
X3
Y2
A1/X5
BK
BU
Transp.
15-20 V DC
B5.
A1/X6
Imbalance
S2.
imbalance interruption at 50g
A1/X11
off 28 bar
reset 21 bar
F6

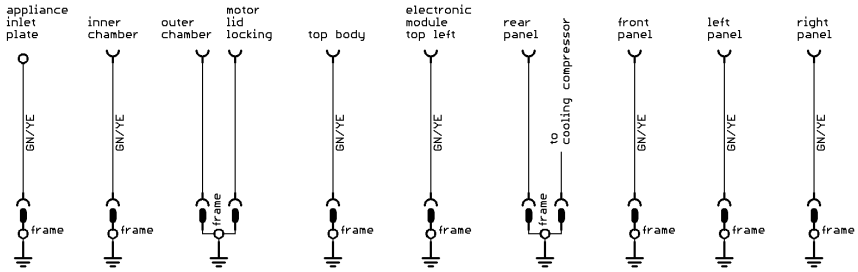
appliance inlet plate
inner chamber
outer chamber
motor lid locking
top body
electronic module top left
rear panel
to cooling compressor
front panel
left panel
right panel
GN/YE
frame

Rev. 02

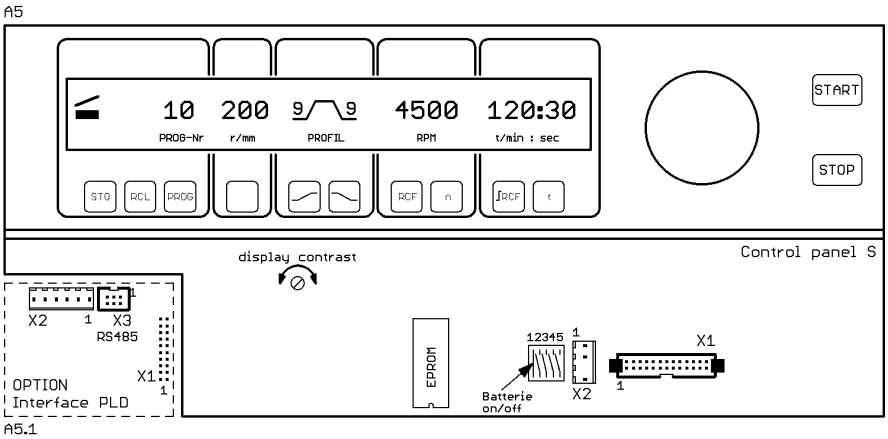
A5
10
200
4500
120:30
PROG-Nr
r/mm
PROFIL
RPM
t/min : sec
STO
RCL
PROG
RCF
n
t
START
STOP
Control panel S
display contrast
X2
X3
RS485
OPTION
Interface PLD
X1
A5.1
EPROM
12345
Batterie
on/off
X2
X1

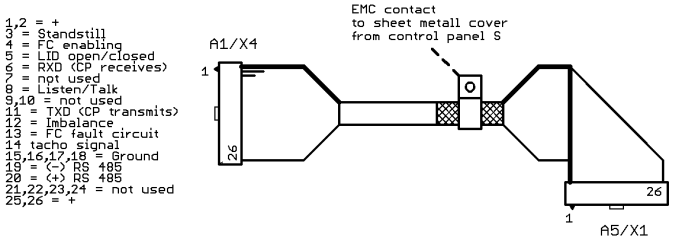
1,2 = +
3 = Standstill
4 = FC enabling
5 = LID open/closed
6 = RXD (CP receives)
7 = not used
8 = Listen/Talk
9,10 = not used
11 = TXD (CP transmits)
12 = Imbalance
13 = FC fault circuit
14 tacho signal
15,16,17,18 = Ground
19 = (-) RS 485
20 = (+) RS 485
21,22,23,24 = not used
25,26 = +
A1/X4
EMC contact
to sheet metall cover
from control panel S
A5/X1

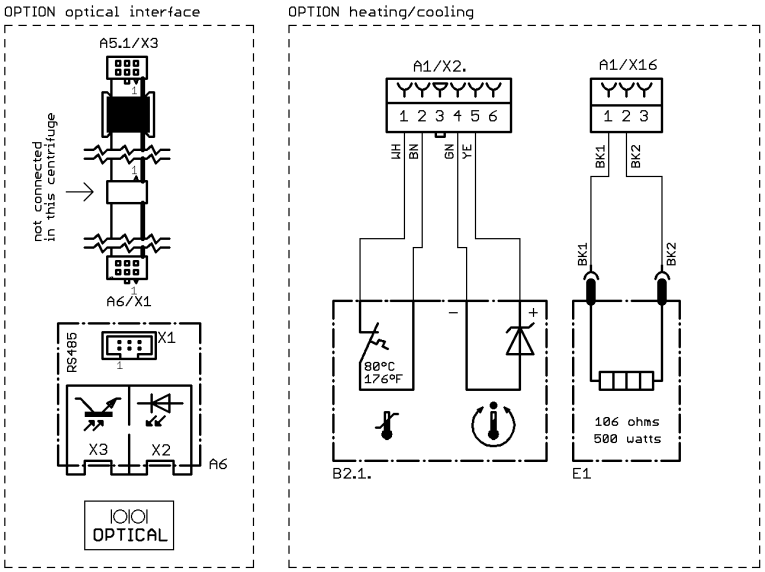
OPTION optical interface
A5.1/X3
not connected
in this centrifuge
A6/X1
RS485
X1
X3
X2
A6
OPTICAL
OPTION heating/cooling
A1/X2.
1 2 3 4 5 6
WH
BN
GN
YE
80°C
176°F
B2.1.
A1/X16
1 2 3
BK1
BK2
106 ohms
500 watts
E1

Rev. 02

4950-08 and 4950-58

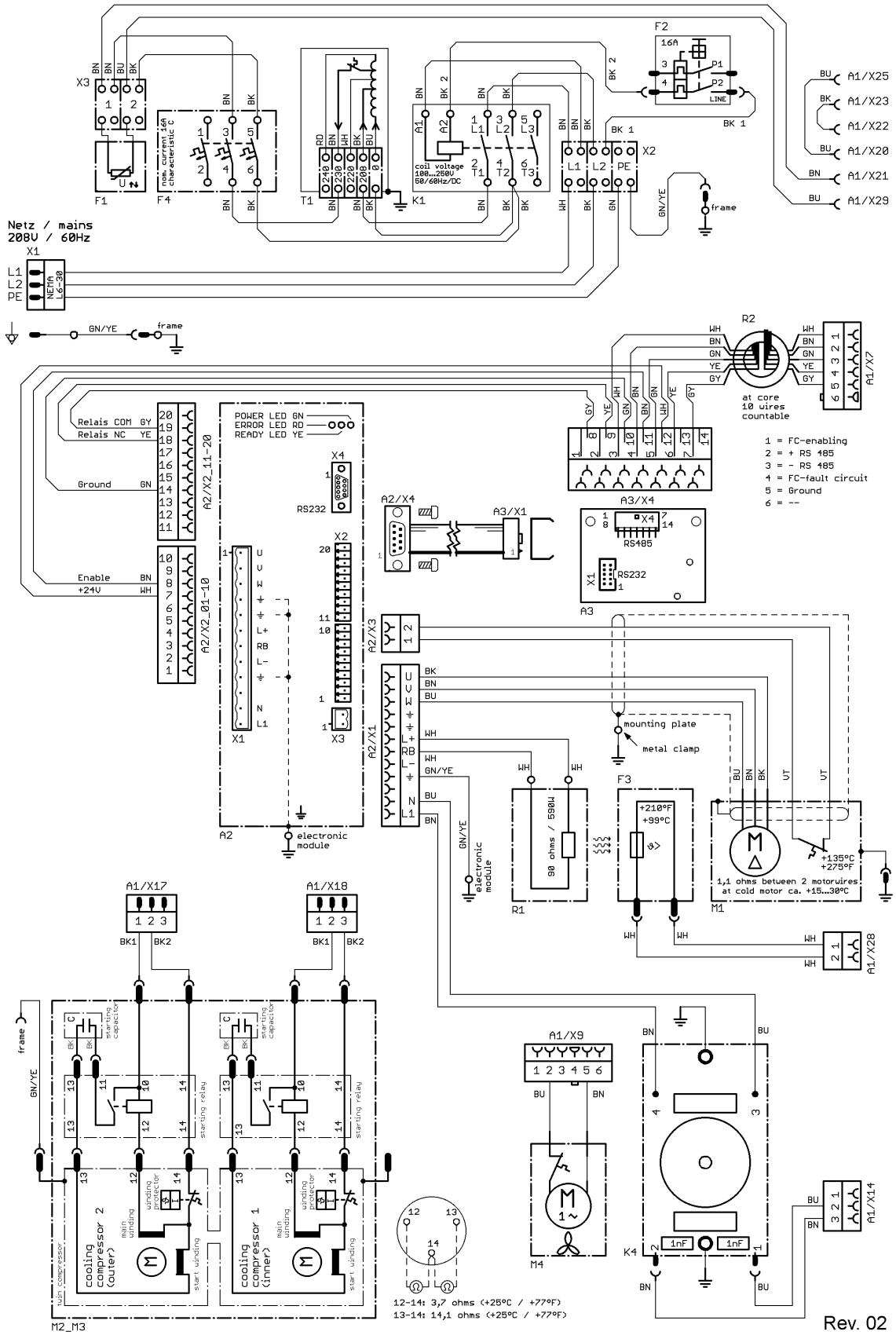

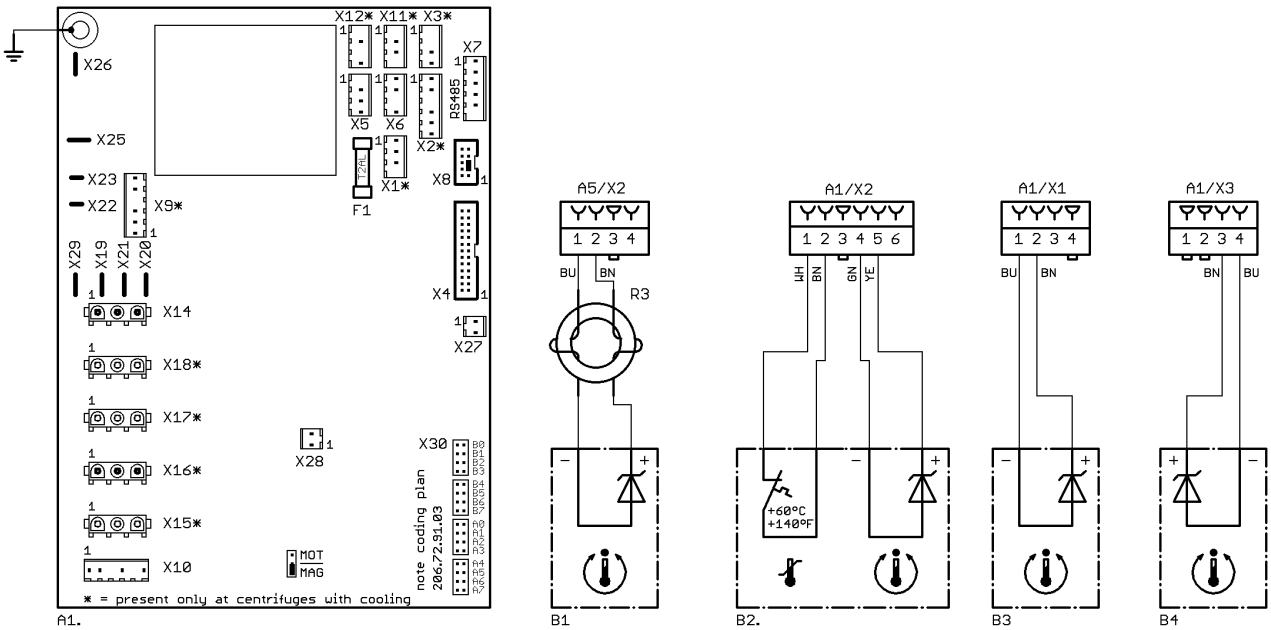

A1	supply board R	Versorgungsplatine R
A1/X30	coding jumper strip	Kodierleiste
A2	frequency converter	Frequenzumrichter
A3	converter board LTI-CDB	Wandlerplatine LTI-CDB
A5	control panel S	Steuerteil S
A5.1	interface PLD (optional)	Schnittstelle PLD (optional)
A6	optical interface RS485 (optional)	Opto-Schnittstelle RS485 (optional)
A7	key switch	Schlüsselschalter
A8	motor driven lid locking	motorischer Deckelverschluss
B1	temperature sensor T1 in lid gasket	Temperaturfühler T1 in der Deckeldichtung
B2	temperature sensor T2 / overheating protection 60°C / 140°F	Temperaturfühler T2 / Temperaturschutz 60°C / 140°F
	at chamber bottom in centrifuge chamber	am Kesselboden
B2.1	temperature sensor T2 / overheating protection 80°C / 176°F	Temperaturfühler T2 / Temperaturschutz 80°C / 176°F
	at chamber bottom in centrifuge chamber (only at heating/cooling version)	am Kesselboden (nur bei Version Heizen / Kühlen)
B3	temperature sensor T3 at condenser	Temperaturfühler T3 am Kondensator
B4	temperature sensor T4 at suction pipe	Temperaturfühler T4 am Saugrohr
B5	speed sensor / rotor identification	Drehzahlsensor / Rotorerkennung
E1	heating (only at heating/cooling version)	Heizung (nur bei Version Heizen / Kühlen)
F1	overvoltage protection	Überspannungsschutz
F2	mains switch with overcurrent protection	Netzschalter mit Überstromschutz
	(overcurrent protection not relevant, see F4)	(Überstromschutz wird hier nicht benötigt, siehe F4)
F3	overheating protection for braking resistor	Übertemperaturschutz am Bremswiderstand
F4	automatic circuit breaker 3~	Sicherungsautomat 3~
F6	overpressure switch	Überdruckschalter
K1	main contactor	Hauptschütz
K4	radio suppression filter	Funkentstörfilter
M1	motor of centrifuge	Motor der Zentrifuge
M2_M3	cooling compressor	Verdichter
M4	fan at condenser	Lüfter am Kondesator
R1	braking resistor	Bremswiderstand
R2	interference coil for supply board	Entstördrossel Versorgungsplatine
R3	interference coil for temperature sensor in lid gasket	Entstördrossel für Temp.-sensor in der Deckeldichtung
S2	imbalance switch	Unwuchtschalter
S3	push button switch "open lid"	Taster "Deckel öffnen"
S4	micro switch at left lid lock	Mikroschalter am linken Verschluss
S5	switch at slide rod (clossed = start possible)	Schalter an der Schubstange (geschlossen=Start möglich)
S6	switch excentric positon at lid locking	Schalter für Excenterposition des Verschlussmotors
T1	autotransformer	Spartransformator
W1	flat cable supply board R <> control panel S	Steuerleitung Versorgungsplatine <> Steuerteil S
W2	flat cable frequency converter <> converter board LTI-CDB	Steuerleitung Frequenzumrichter <> Wandlerplatine LTI-CDB
W3	flat cable interface PLD <> optical interface RS485	Steuerleitung Schnittstelle PLD <> Opto-Schnittstelle RS485
W4...W42	internal wiring, flat cable seperately listed above	interne Verdrahtung, Flachbandkabel getrennt aufgeführt
X1	power plug	Netzstecker
X2	terminal for power input	Anschlussklemme für Netzeingang
X3	terminal for overvoltage protection	Anschlussklemme für Überspannungsschutz
Y2	magnetic valve 2nd capillary tube	Magnetventil zweites Kapillarrohr

Rev. 02

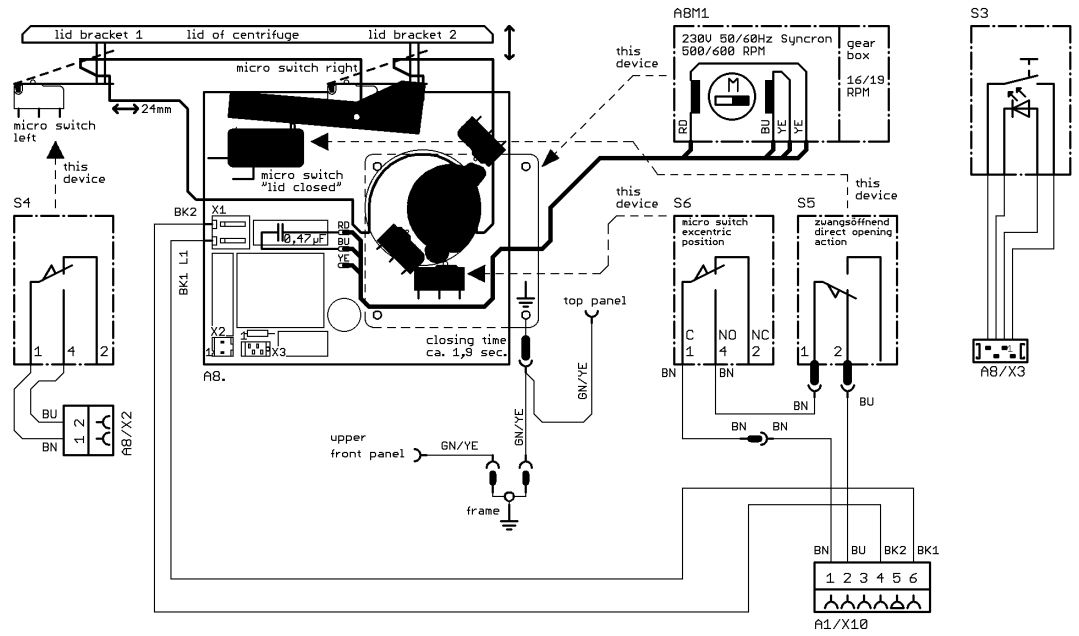
lid bracket 1
lid of centrifuge
lid bracket 2
micro switch right
24mm
micro switch left
this device
micro switch "lid closed"
A8M1
230V 50/60Hz Syncron 500/600 RPM
gear box
16/19 RPM
S3
S4
BK2
X1
0,47 µF
BK1 L1
X2
X3
closing time ca. 1,9 sec.
A8.
top panel
GN/YE
S6
micro switch excentric position
S5
zwangsöffnend direct opening action
A8/X3
A8/X2
upper front panel
frame
BN
BU
BK2
BK1
A1/X10

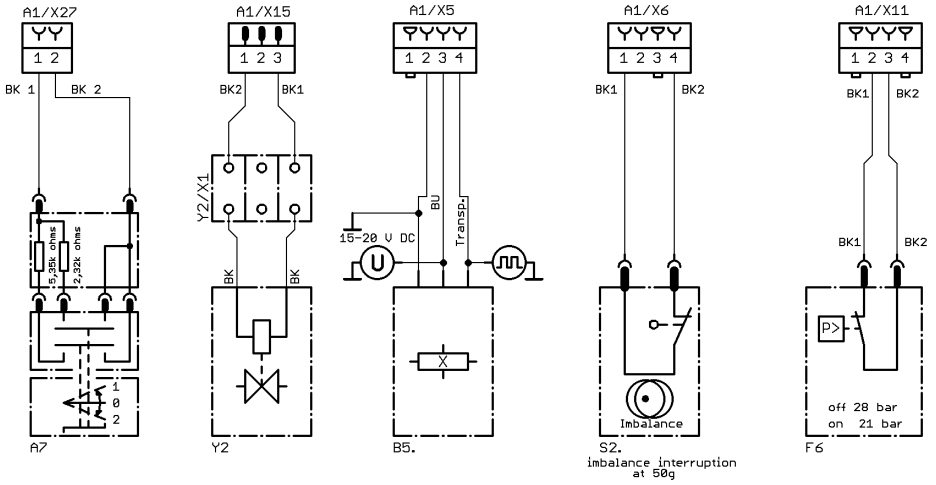
A1/X27
BK 1
BK 2
5,35k ohms
2,32k ohms
A7
A1/X15
Y2/X1
BK
Y2
A1/X5
15-20 V DC
BU
Transp.
B5.
A1/X6
Imbalance
S2.
imbalance interruption at 50g
A1/X11
off 28 bar
on 21 bar
F6

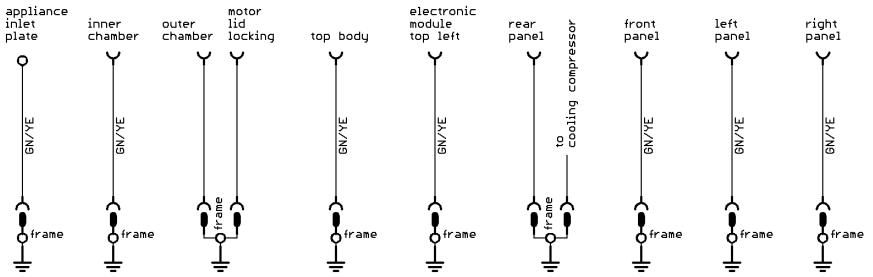
appliance inlet plate
inner chamber
outer chamber
motor lid locking
top body
electronic module top left
rear panel
to cooling compressor
front panel
left panel
right panel
GN/YE
frame

Rev.02

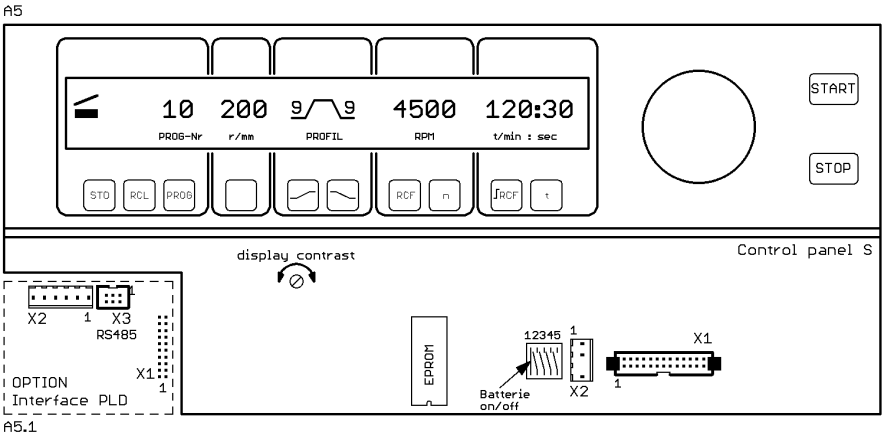
A5
10
200
4500
120:30
PROG-Nr
r/mm
PROFIL
RPM
t/min : sec
START
STOP
STO
RCL
PROG
RCF
n
t
display contrast
Control panel S
X2
X3
RS485
X1
OPTION
Interface PLD
A5.1
EPROM
12345
Batterie
on/off
X2
X1

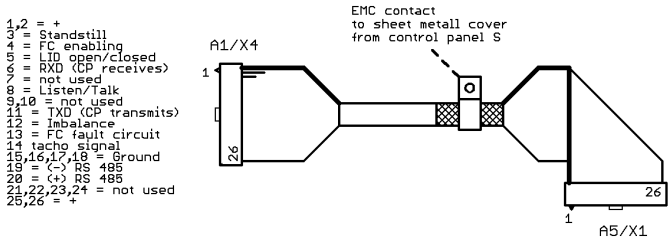
1,2 = +
3 = Standstill
4 = FC enabling
5 = LID open/closed
6 = RXD (CP receives)
7 = not used
8 = Listen/Talk
9,10 = not used
11 = TXD (CP transmits)
12 = Imbalance
13 = FC fault circuit
14 tacho signal
15,16,17,18 = Ground
19 = (-) RS 485
20 = (+) RS 485
21,22,23,24 = not used
25,26 = +
A1/X4
EMC contact
to sheet metall cover
from control panel S
A5/X1

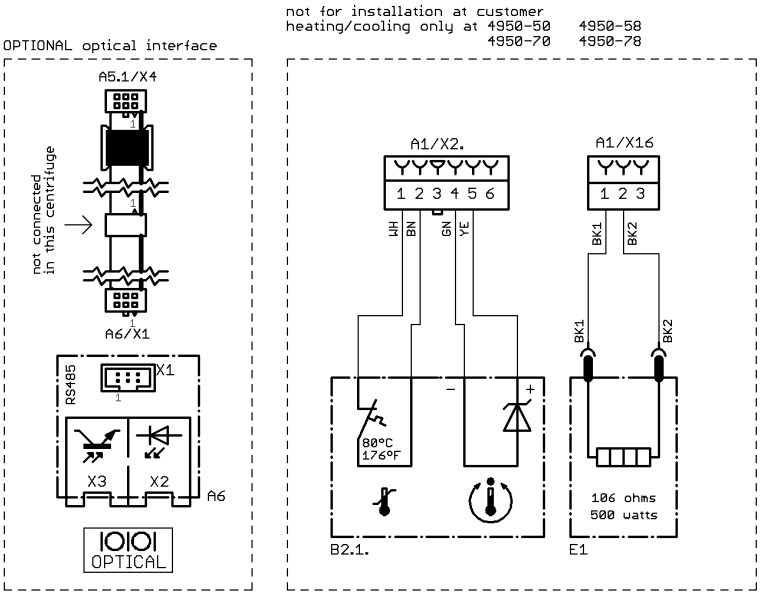
OPTIONAL optical interface
not for installation at customer
heating/cooling only at 4950-50 4950-58
4950-70 4950-78
A5.1/X4
not connected
in this centrifuge
A6/X1
RS485
X1
X3
X2
A6
OPTICAL
A1/X2.
1 2 3 4 5 6
WH
BN
GN
YE
80°C
176°F
B2.1.
A1/X16
1 2 3
BK1
BK2
106 ohms
500 watts
E1

Rev. 02

10.3 Cooling scheme

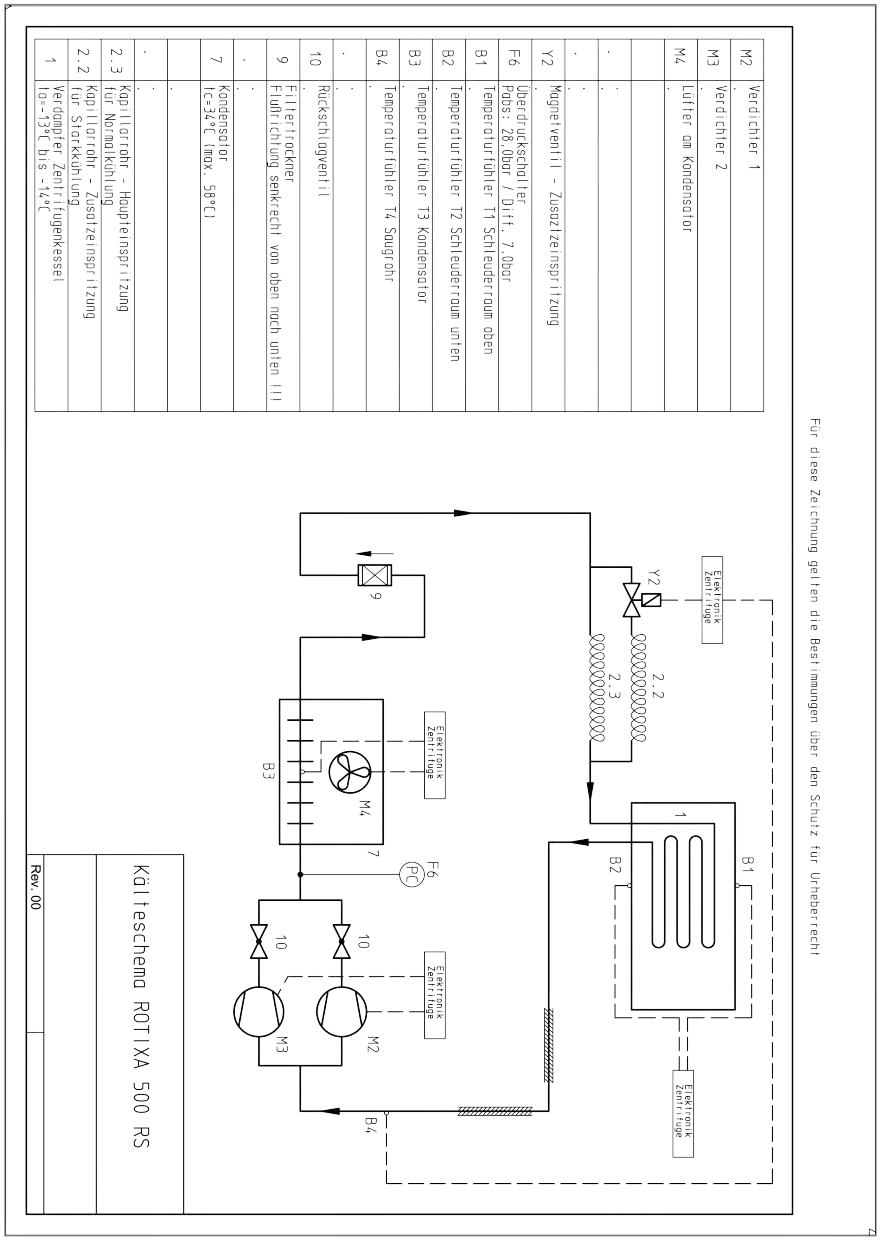

10.4 Cooling unit version

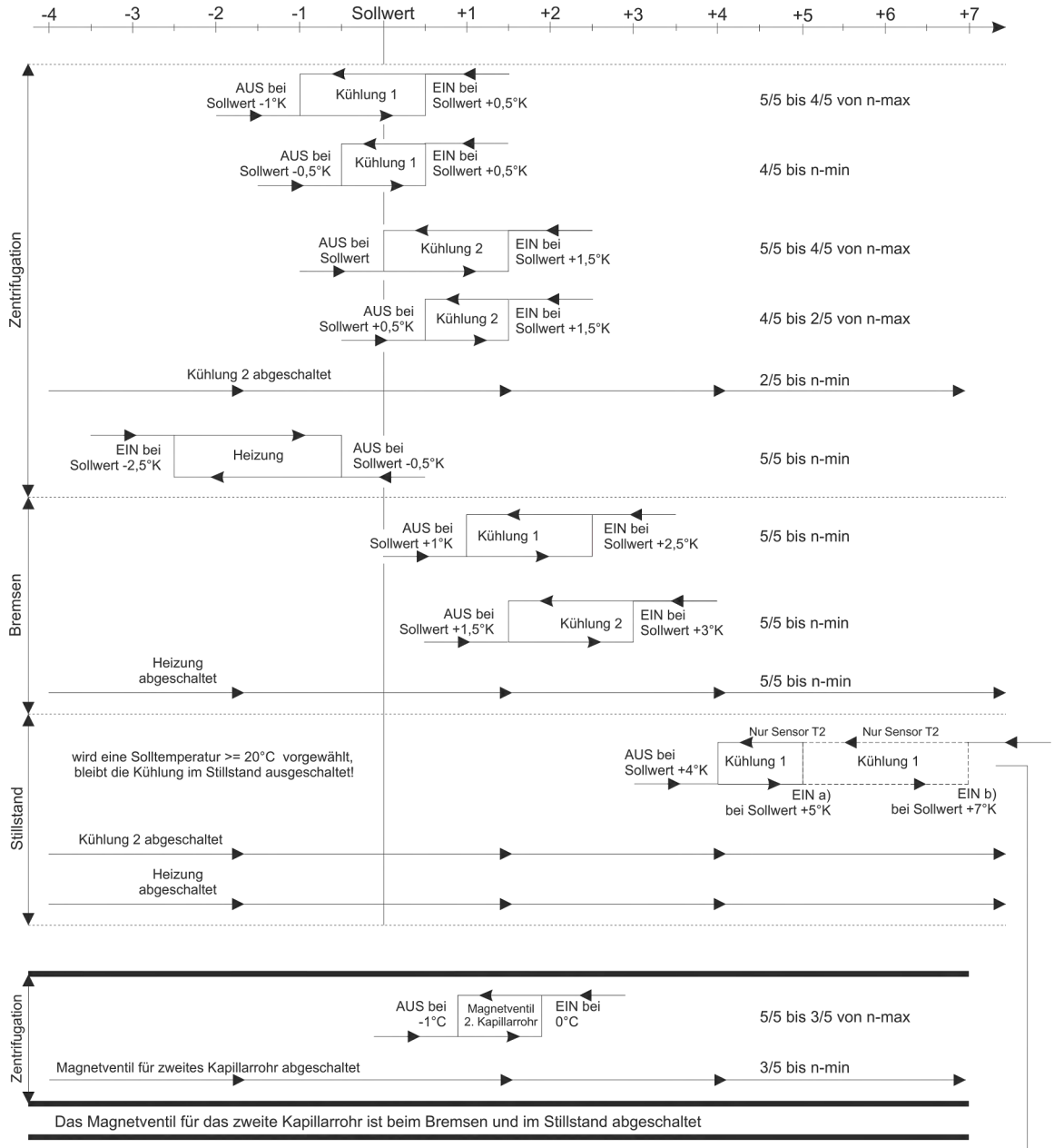

Sensorbewertung

	Temperatur-Sensor T1	Temperatur-Sensor T2
Drehzahlbereich 5/5 bis 4/5 von n-max Rotor	1	1
Drehzahlbereich 4/5 bis 3/5 von n-max Rotor	2	1
Drehzahlbereich 3/5 bis 2/5 von n-max Rotor	3	1
Drehzahlbereich 2/5 bis 1/5 von n-max Rotor	4	1
Drehzahlbereich 1/5 bis n-min	5	1

T1 : Temperatur-Sensor im Schleuderraum oben
T2 : Temperatur-Sensor im Schleuderraum unten

Kühlung 1 : Verdichter 1
Kühlung 2 : Verdichter 2

Erklärung zu: EIN a) = getaktet 60 s EIN / 6 min AUS
EIN b) = getaktet 90 s EIN / 6 min AUS

Die Kühlung wird erst 15 s nach Start eingeschaltet

Kühlung 2 wird erst 15 s nach Einschalten von Kühlung 1 eingeschaltet

Nur bei externer Kühlung (Kühlversion 5 und 6): Sobald sich der Rotor dreht und Tachoimpulse erkannt werden, liegen am Steckplatz X9 der Versorgungs-platine (A1) 230 V~ an (für Versorgung des Lüfters zur Kühlung des Motors)

10.5 Rotor tacho code

Tachocode-Belegung der Rotoren
Beispiel: Tachocode Nr. 9

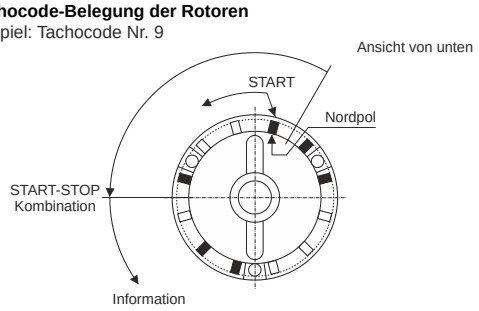

Tachocode bestimmt: 1. Maximale Drehzahl des Rotors
2. Anlauf- und Bremsrampen
3. Regelverhalten der Elektronik

z.B. Rotor 4294 1001 01100011

Rotorcode
Start / Stop Kombination.
Der Beginn der Start / Stop Kombination
ist mit einem weißen Punkt markiert.

0 = kein Magnet (leerer Platz), 1 = Magnet eingesetzt

Tachocode-Nr.:	Belegung	RPM	Rotor
0	1001 00001111		
1	1001 00010111		
2	1001 00011011		
3	1001 00011101	11500	4246
4	1001 00011110		
5	1001 01000111	9500	4266
6	1001 01010101	10000	4248
7	1001 01010110		
8	1001 01011010	4000	4296
9	1001 01100011	4500	4294
10	1001 01110001		
11	1001 10000111	3600	4282
12	1001 10001011	2000	4316, 4274
13	1001 10001101		
14	1001 10100011		
15	1001 11000011		

10.6 Maintenance log

Protokoll Wartung und STK Rotixa 500 RS

Auftraggeber/Kunde:	**Auftragsnummer:**	**Kundenummer:**	
	Protokollnummer:	**Blatt:**	**von:**
Gerät/Geräte Standort/Ansprechpartner:	**Auftragnehmer:**	**Software Stand:**	

Tätigkeit:	i.O.☐	n.i.O. ☐	Messwert/Bemerkung
Motor auf Beschädigung und Korrosion prüfen Motorlagerung prüfen.	i.O.☐	n.i.O. ☐	
Gummi-Metall-Lager auf Porosität und Rissbildung prüfen (Verbindung Gummi-Metall).	i.O.☐	n.i.O. ☐	
Gasdruckfeder auf Druck prüfen. Der Deckel muss durch die Federkraft gehalten werden	i.O.☐	n.i.O. ☐	
Verschluss auf Funktion prüfen. Deckel öffnen und schließen	i.O.☐	n.i.O. ☐	
Rotor auf Rissbildung/Schäden (Oberflächen) und Korrosion prüfen Verfallsdatum / Zyklenzahl und Betriebsstunden prüfen	i.O.☐	n.i.O. ☐	
Deckel biodicht: Prüfung auf Rissbildung des Deckels und Dichtung und lagerichtiger Einbau (Dichtung gelöst)	i.O.☐	n.i.O. ☐	
Dichtung Schleuderraum: Prüfung auf Rissbildung/Schäden, Beschädigungen. Lagerichtiger Einbau (Dichtung gelöst)	i.O.☐	n.i.O. ☐	
Kompressor Prüfung auf ungewöhnliche Laufgeräusche (Motor schlägt/Lagerung), Ölstand (Sichtfenster wenn vorhanden). Prüfung auf Korrosion.	i.O.☐	n.i.O. ☐	
Kondensator auf Sauberkeit prüfen und ggf. mit Staubsauger berührungslos reinigen.	i.O.☐	n.i.O. ☐	
Motorabdeckung, flexible Abdichtung: Prüfung auf Rissbildung/Schäden (Lagerichtiger Einbau)	i.O.☐	n.i.O. ☐	

Elektrische Prüfung nach IEC 61010/DIN EN 61010 und DIN VDE0701-0702

1. Prüfung darf nur von einer autorisierten Elektrofachkraft durchgeführt werden.
2. Messgeräte müssen die Norm IEC 61557-16/DIN EN 61557-16 einhalten. Empfehlung: Fluke ESA 620 (Das Messgerät muss den Ableitstrom zwingend nach der Messschaltung „A.1 Messanordnung für Wechselstrommit Frequenzen bis 1 MHz und für Gleichstrom“ der Norm IEC 61010-1 messen.)
3. Messbedingungen gemäß Norm IEC 61010/DIN EN 61010
4. Die Prüffristen sind aus der DGUV Regel 100 – 500 bzw. der DGUV V3 zu entnehmen.

Elektrische Prüfung nach IEC 61010/DIN EN 61010 und DIN VDE0701-0702

Gerätedaten:	i.O.☐	n.i.O. ☐	Messwert/Bemerkung
Hersteller	i.O.☐	n.i.O. ☐	
Serialnummer	i.O.☐	n.i.O. ☐	
Sichtprüfung	i.O.☐	n.i.O. ☐	
Typenschild/Warnhinweise	i.O.☐	n.i.O. ☐	
Kühlluftöffnungen/Luftfilter Anzeichen von Überlastung	i.O.☐	n.i.O. ☐	
Gehäuse/Schutzabdeckungen Schalter, Steuer-, Einstell- und Sicherheitsvorrichtungen	i.O.☐	n.i.O. ☐	
Verschmutzung/Korrosion/Alterung	i.O.☐	n.i.O. ☐	
Anschlussleitung/-stecker	i.O.☐	n.i.O. ☐	
Biegeschutz/Zugentlastung der Anschlussleitung	i.O.☐	n.i.O. ☐	

Messungen:	Grenzwert	Messwert	i.O.☐	n.i.O. ☐
Schutzleiterwiderstand	Ω	Ω		
Isolationswiderstand	MΩ	MΩ		
Gehäuseableitstrom	MA	MA		

Verwendete Messgeräte:	
Fabrikat	
Typ	
Serialnummer	
Letzte Kalibrierung	

Erweiterung ☐	Änderung☐	Instandsetzung ☐	Wiederholungsprüfung ☐
Prüfergebnis:			
Funktion des Gerätes		Ja ☐	Nein ☐
Keine Mängel festgestellt		☐	
Mängel festgestellt		☐	

Mängel/Bemerkungen:

Auftraggeber:	**Prüfer/-in:**
Ort, Datum Unterschrift	Ort, Datum Unterschrift

11 Index

1, 2, 3 ...

"AVERAGE F" value. 103

A

Activating the program link (option). 104
Appendix. 111
Connection plan. 114
Cooling scheme. 122
Cooling unit version. 123
Maintenance log. 125
Rotor tacho code. 124
Technical data. 111

B

Battery
connecting. 91
replacing. 73
Block diagram. 10

C

Change logs 24
Connection plan. 114
Control panel. 11
Control panel (A5)
dismounting. 70
mounting. 71
Cooling circuit. 88
Cooling scheme. 111, 122
Cooling unit version. 123

D

Date and time. 94
Display
Adjusting the contrast. 97
Disposal. 106

E

Electrical safety test. 52
EPROM
dismounting. 72
mounting. 72
Error message
acoustic. 26
calling up. 22
Delete. 47
on the display. 23
regenerating. 26
Exploded view. 7

F

Fan
dismounting. 82
mounting. 83
Fan control. 15
Frequency converter (A2)
dismounting. 69
LED display. 25
Malfunction messages, flashing code 25
mounting. 70
Front panel
dismounting. 56, 57
mounting. 57, 61
Function check
after repair. 88
after the test run. 89
during the test run. 89

G

Gas spring
dismounting. 84
mounting. 84

H

Hours of operation
adjusting. 98
querying. 23

I

Imbalance message on the display. 24
Imbalance mode. 96
setting in the program. 97
setting on supply board (A1). 96
Initialization. 90
of the centrifuge. 90
performing. 92
preparing. 90
Intended use. 17

J

Jumper assignment. 13

K

Key switch
dismounting. 86
mounting. 86

L

LED
Display. 25
replacing. 87
Lid lock
dismounting. 76
mounting. 78
Setting the version. 101
Lid seal
dismounting. 85
mounting. 85

M

Mains-Reset 47
Maintenance
Maintenance log. 125
Maintenance plan. 48
Maintenance table. 50
Maintenance tasks. 51
Maintenance log 125
Motor
dismounting. 61
mounting. 63

O

OFFSET alignment. 95
Overview
Control panel. 11
Fan control. 15
Jumper assignment. 13
of the device. 7
Temperature sensors. 14
Overvoltage protection
dismounting. 74
mounting. 75

P

Personnel. 20
Personnel qualification. 20

Q

Querying motor slip. 101

R

Radio interference filter
dismounting. 87
mounting. 88
Rear wall
dismounting. 54
mounting. 56
Remaining risks. 18
Replacing the motor closure unit. 83
Rotor tacho code. 124

S

Setting the "Leading Time". 100
Setting the "Temp.Average" time. 99
Side panels
dismounting. 53
mounting. 54
Speed sensor
dismounting. 66
mounting. 67
Supply board (A1)
dismounting. 68
mounting. 68
Symbols
in these instructions. 16

T

Technical data. 111
Temperature query. 101
Temperature sensor T1
dismounting. 78
mounting. 79
Temperature sensor T2
dismounting. 79
mounting. 80
Temperature sensor T3
dismounting. 80
mounting. 81
Temperature sensor T4
dismounting. 81
mounting. 82
Temperature sensors 14
Temperature smoothing. 102
Test
Assembly, screw connections. 49
Cable routing, plug and clamped connections. . 49
Checking for proper operating state. 48
Control panel. 49
Electrical safety test. 52
Fastening. 49
Imbalance switch-off. 49
Lid, gas spring, hinges. 49
Measuring devices/measuring accessories. . . . 48
Test items. 49
Test run with cooling system. 49
Test run without cooling system. 49

U

Unbalance switch
adjusting. 64
dismounting. 75
mounting. 76